TRS-STAR

t.exterieur

Urban lights – classic, timeless, functional

LED Outdoor Lights | **Product Overview**

t.exterieur

Urban lights – classic, timeless, functional

Innovation and Curiosity are Strong Partners

Light - from innovative technology, in trend-setting design and execution in high reference quality is the focus of our thoughts and actions. We harmonize economic and ecological aspects. The added value for our customers lies in the combination of service and technical implementation.

We advise and develop solutions for energy-efficient, long-lasting and sustainable lighting worlds in cooperation with our customers and partners.

LED technology opens up completely new possibilities for efficiently designing lighting situations. Their economy and service life are convincingly good and we are also constantly improving them.

Our outdoor lighting series are the combinations of classic, lantern shaped luminaire of a contemporary type, to street lights in functional design, equipped with innovative LED technology and outstanding technical characteristicp.

All street lighting series can be set individually and as required using the microprocessor-controlled LED operating electronics and comply with DIN EN 13201, so that street lighting that conforms to standards is guaranteed.

axhena | Technical Street Lights

axhena 1501 p. 14
axhena 1502 p. 14
axhena 1503 p. 15

axhena 1601 p. 15
axhena 1602 p. 16
axhena 1603 p. 16

axhena 1701 p. 18
axhena 1702 p. 18
axhena 1703 p. 19

axares | Decorative Street Lights

axares 1201 p. 20
axares 1202 p. 20
axares 1203 p. 22

axares | Decorative Street Lights

axares 1801 p. 22
axares 1802 p. 23
axares 1803 p. 23
axares 1901 p. 24

axares 2002 p. 24
axares 2003 p. 26
axares 2004 p. 27

axares 2005 p. 28
axares 2006 p. 27
axares 2401 p. 28

axares 2101 p. 29
axares 2102 p. 29
axares 2103 p. 30
axares 2104 p. 30

axares 2201 p. 31
axares 2202 p. 31
axares 2203 p. 32
axares 2204 p. 32

axares 2205 p. 32
axares 2301 p. 33
axares 2302 p. 34
axares 2303 p. 34

axares 2304 p. 36

axares 2501 p. 36
axares 2601 p. 37
axares 2801 p. 37

axares 3001 p. 38
axares 3002 p. 38
axares 3201 p. 40

axares 3101 p. 40
axares 3102 p. 41
axares 3401 p. 41

axtheas | Hanging Lights

axtheas 4001 p. 43

axtheas 4101 p. 43

axtheas 4102 p. 44

axtheas 4301 p. 44

axtheas 4501 p. 45

axtheas 4201 p. 45

axtheas 4202 p. 46

axtheas 4203 p. 46

axtheas 4701 p. 47

axtheas 4801 p. 47

axtheas 4901 p. 48

axerna | Stele Lights

axerna 5001 p. 49
axerna 5002 p. 49
axerna 5003 p. 51
axerna 5004 p. 51

axerna 5005 p. 52

axior | Bollard Lights

axior 6001 p. 54
axior 6002 p. 54
axior 6003 p. 55

axior 6004 p. 55
axior 6006 p. 56

axior | Bollard Lights

axior 6101 p. 56

axior 6102 p. 57

axior 6103 p. 57

axior 6202S p. 58

axior 6202 p. 58

axior 6608 p. 59

axior | Wall and Ceiling Outdoor Lights

axior 6407 p. 59

axior 6800 p. 60

axior 6801 p. 60

axior 6802 p. 60

axior 6418 p. 61

axior 6420 p. 61

axior 6421 p. 62

axior | Wall and Ceiling Outdoor Lights

axior 6422 p. 62
axior 6423 p. 63

axior 6900 p. 63
axior 6901 p. 64
axior 6902 p. 64
axior 6903 p. 64

axior 6906 p. 65
axior 6907 p. 65
axior 6907B p. 65
axior 6403 p. 66

axior | Recessed FloorLights

axior 6999 S p. 66
axior 6999 L p. 67
axior 6999 RGB p. 67
axior 6998 RGBW p. 67

axthuros | Planar radiator

axthuros 9160 p. 68

axthuros 9161 p. 68

axthuros 9161 RGB p. 69

axthuros 9162 p. 69

axthuros 9163 p. 70

axthuros 9200 p. 70

axthuros 9201 p. 71

Light Distribution Curves | Lenses p. 11-13

Accessories p. 72-75

Article Number Assignments | Explanation

Example:
1202■■00♦♦ME-●16

1202	Model number
■■	System performance typ. e.g. 07 / 13 / 19
♦♦	Light color 27=2700K, 30=3000K, 40=4000K, AM=Amber
BA / ME	BA=Basic / ME=Medium
●	Lens
AY	HighPower LED
16	MidPower LED

E.g. 1202190030ME-S16
Model 1202, 19 Watt, 3000K, Medium, MidPower LED with S-Lens

t.exterieur
Urban lights – classic, timeless, functional

Light Distribution Curves | Lenses

Residential streets, parking lots

A-Lense

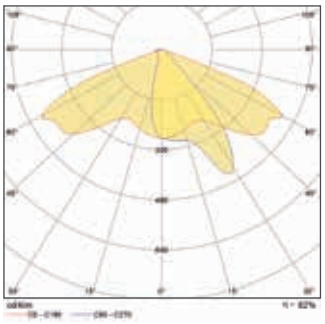

B-Lense

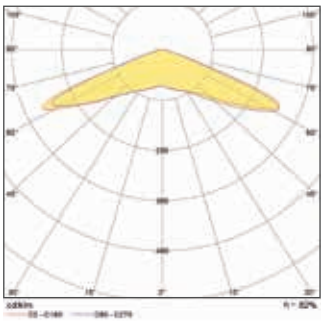

C-Lense

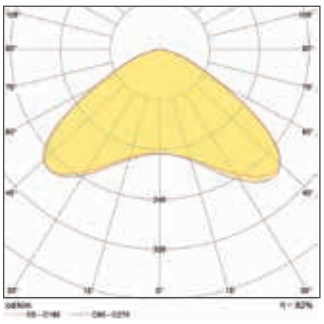

D-Lense

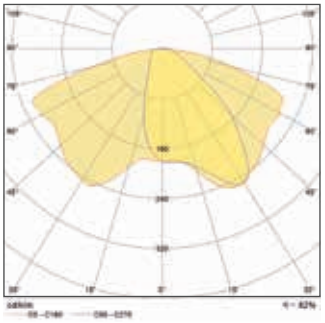

S-Lense

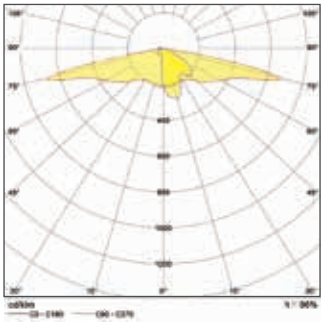

V-Lense

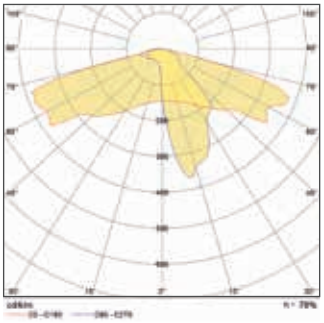

X-Lense

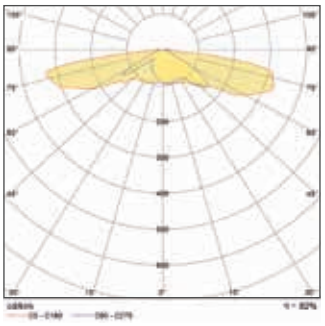

Light Distribution Curves | Lenses

Cable span lights

N-Lense

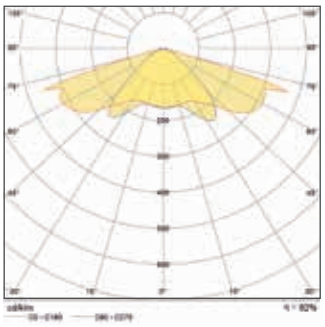

O-Lense

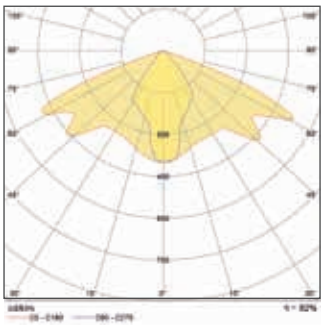

U-Lense

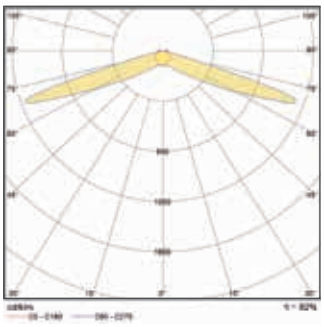

Major roads

M-Lense

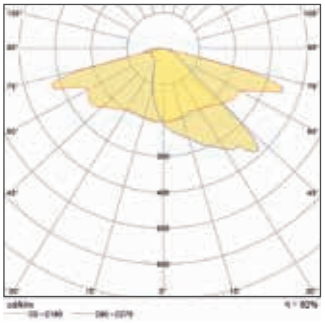

E-Lense

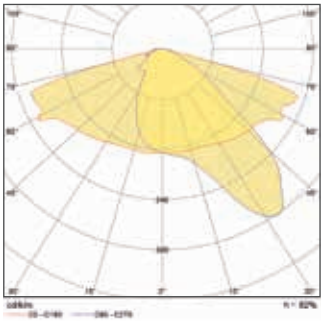

Y-Lense

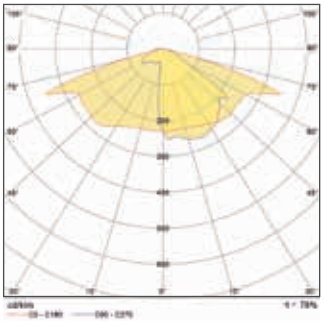

Pedestrian crossings

R-Lense

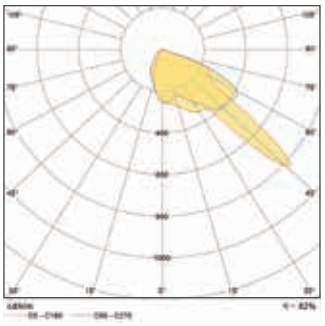

Light Distribution Curves | Lenses

Planar radiator / Industrial Lights

F-Lense

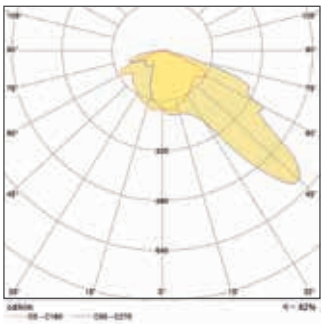

I-Lense

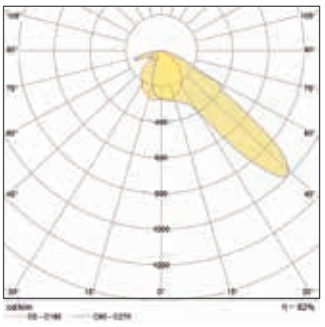

P-Lense

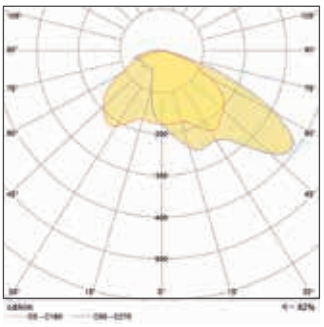

1550-Lense

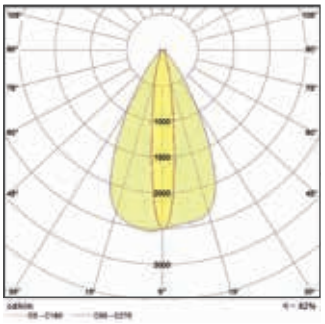

T-Lense

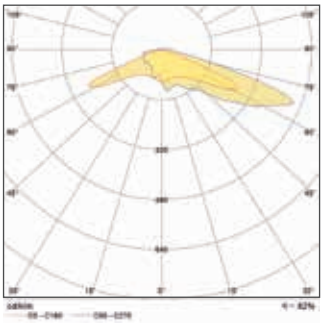

SY10-Lense

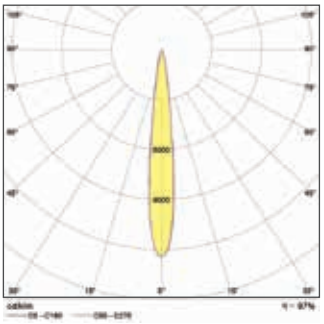

SY20-Lense

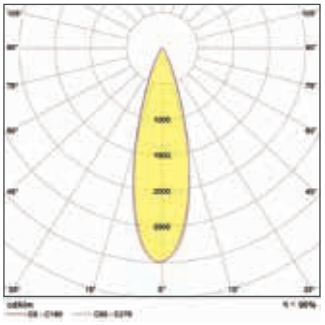

SY60-Lense

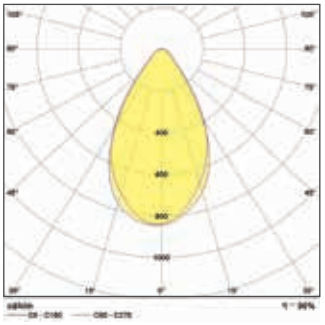

SY120-Lense

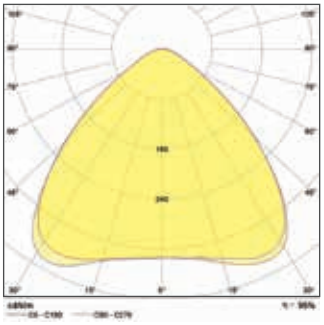

axhena | Technical Street Lights

axhena 1501

- Functional and elegant design
- ESG luminaire glass
- Optics PMMA lenses in multilayer technology
- Housing made of powder-coated aluminum
- Side-entry, post-top with spigot size 60/76 mm
- Inclination angle adjustable from -10° to + 15°
- Dimensions: H = 130 | B = 250 | T = 485 (mm)
- Total weight 4.9 kg
- Can be opened without tools
- Power reduction switching phase ChronoStep, Dali
- Housing color RAL9022, others on request
- Dielectric strength 10kV

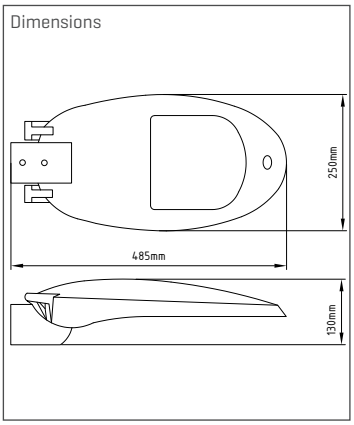

Product number	Lense (●)	Light Color (♦♦)	System performance (W)	System performance typ. (■■W)	LED assembly	System luminous flux (lm)
1501■■00♦♦ME-●AY	S/X/C/B/M/E	27/30/40	7 - 19	07/13/19	1 x 2x4	846 - 2362
1501■■00♦♦ME-●AY	S/X/C/B/M/E	27/30/40	18 - 32	18/22/32	2 x 2x4	2208 - 4175
1501■■00♦♦ME-●16	Y/V/M/S/B	AM/27/30/40	7 - 19	07/13/19	1 x 4x8	1144 - 3017
1501■■00♦♦ME-●16	Y/V/M/S/B	AM/27/30/40	18 - 32	18/22/32	2 x 4x8	2985 - 5023

axhena 1502

- Functional and elegant design
- ESG luminaire glass
- Optics PMMA lenses in multilayer technology
- Housing made of powder-coated aluminum
- Side-entry, post-top with spigot size 60/76 mm
- Inclination angle adjustable from -10° to + 15°
- Dimensions: H = 152 | B = 295 | T = 620 (mm)
- Total weight 6.5 kg
- Can be opened without tools
- Power reduction switching phase ChronoStep, Dali
- Housing color RAL9022, others on request
- Dielectric strength 10kV

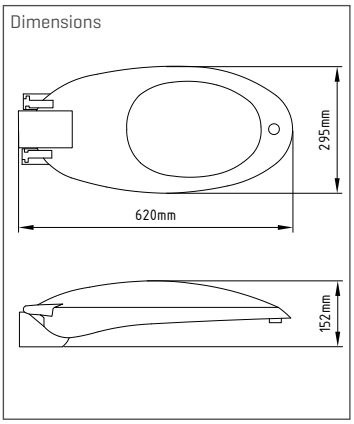

Product number	Lense (●)	Light Color (♦♦)	System performance (W)	System performance typ. (■■W)	LED assembly	System luminous flux (lm)
1502■■00♦♦ME-●AY	S/X/C/B/M/E/R	27/30/40	42 - 82	42/52/62/72/82	2 x 2x8	5466 - 10360
1502■■00♦♦ME-●16	Y/V/M/S/B	AM/27/30/40	42 - 82	42/52/62/72/82	2 x 4x16	7631 - 13411

axhena | Technical Street Lights

axhena 1503

- Functional and elegant design
- ESG luminaire glass
- Optics PMMA lenses in multilayer technology
- Housing made of powder-coated aluminum
- Side-entry, post-top with spigot size 60/76 mm
- Inclination angle adjustable from -10° to + 15°
- Dimensions: H = 150 | B = 360 | T = 825 (mm)
- Total weight 11.8 kg
- Can be opened without tools
- Power reduction switching phase ChronoStep, Dali
- Housing color RAL9022, others on request
- Dielectric strength 10kV

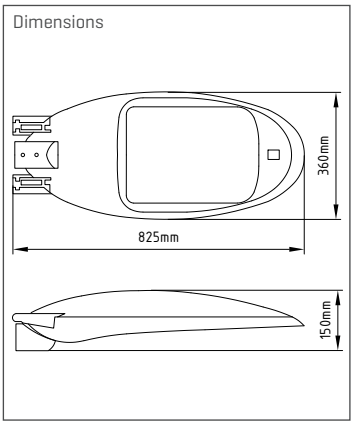

Product number	Lense (●)	Light Color (♦♦)	System performance (W)	System performance typ. (■■W)	LED assembly	System luminous flux (lm)
1503■■00♦♦ME-●AY	S/X/C/B/M/E/R	27/30/40	100 - 150	100/120/150	3 x 2x8	
1503■■00♦♦ME-●16	Y/V/M/S/B	AM/27/30/40	100 - 150	100/120/150	3 x 4x16	

axhena 1601

- Functional technical design
- ESG luminaire glass
- Optics PMMA lenses in multilayer technology
- Housing made of powder-coated aluminum
- Side-entry, post-top with spigot size 60/76 mm
- Inclination angle adjustable from -10° to + 15°
- Dimensions: H = 110 | B = 330 | T = 565 (mm)
- Total weight 6.7 kg
- Can be opened without tools
- Power reduction switching phase ChronoStep, Dali
- Housing color DB703, others on request
- Dielectric strength 10k

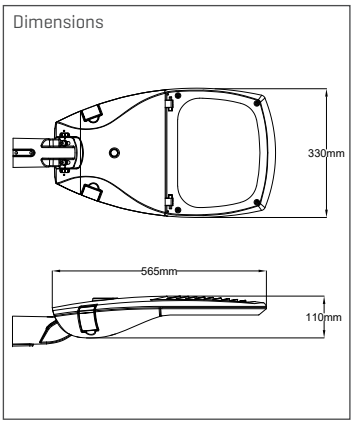

Product number	Lense (●)	Light Color (♦♦)	System performance (W)	System performance typ. (■■W)	LED assembly	System luminous flux (lm)
1601■■00♦♦ME-●AY	S/X/C/B/M/E	27/30/40	7 - 19	07/13/19	1 x 2x4	846 - 2362
1601■■00♦♦ME-●AY	S/X/C/B/M/E	27/30/40	18 - 32	18/22/32	2 x 2x4	2208 - 4175
1601■■00♦♦ME-●16	Y/V/M/S/B	AM/27/30/40	7 - 19	07/13/19	1 x 4x8	1144 - 3017
1601■■00♦♦ME-●16	Y/V/M/S/B	AM/27/30/40	18 - 32	18/22/32	2 x 4x8	2985 - 5023

axhena | Technical Street Lights

axhena 1602

- Functional technical design
- ESG luminaire glass
- Optics PMMA lenses in multilayer technology
- Housing made of powder-coated aluminum
- Side-entry, post-top with spigot size 60/76 mm
- Inclination angle adjustable from -10° to + 15°
- Dimensions: H = 118 | B = 381 | T = 665 (mm)
- Total weight 6.7 kg
- Can be opened without tools
- Power reduction switching phase ChronoStep, Dali
- Housing color DB703, others on request
- Dielectric strength 10kV

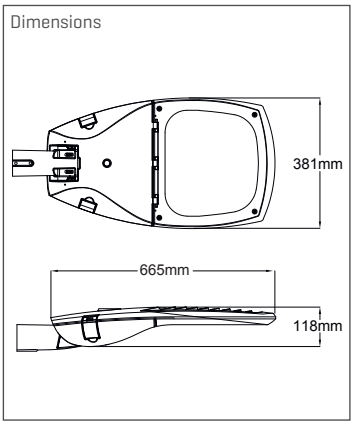

Product number	Lense (●)	Light Color (♦♦)	System performance (W)	System performance typ. (■■W)	LED assembly	System luminous flux (lm)
1602■■00♦♦ME-●AY	S/X/C/B/M/E/R	27/30/40	42 - 83	42/52/62/72/82	2 x 2x8	5466 - 10360
1602■■00♦♦ME-●16	Y/V/M/S/B	AM/27/30/40	42 - 82	42/52/62/72/82	2 x 4x16	7631 - 13411

axhena 1603

- Functional technical design
- ESG luminaire glass
- Optics PMMA lenses in multilayer technology
- Housing made of powder-coated aluminum
- Side-entry, post-top with spigot size 60/76 mm
- Inclination angle adjustable from -10° to + 15°
- Dimensions: H = 125 | B = 455 | T = 865 (mm)
- Total weight 11.8 kg
- Can be opened without tools
- Power reduction switching phase ChronoStep, Dali
- Housing color DB703, others on request
- Dielectric strength 10k

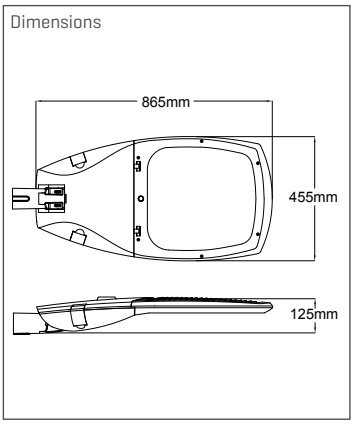

Product number	Lense (●)	Light Color (♦♦)	System performance (W)	System performance typ. (■■W)	LED assembly	System luminous flux (lm)
1603■■00♦♦ME-●AY	S/X/C/B/M/E/R	27/30/40	100 - 150	100/120/150	3 x 2x8	15121 - 20641
1603■■00♦♦ME-●16	Y/V/M/S/B	AM/27/30/40	100	100	3 x 4x16	16425
1603■■00♦♦ME-●16	Y/V/M/S/B	AM/27/30/40	120 - 137	120/137	4 x 4x16	20010 - 21991

axhena | Technical Street Lights

axhena 1701

- Functional technical design
- ESG luminaire glass
- Optics PMMA lenses in multilayer technology
- Housing made of powder-coated aluminum
- Side-entry, post-top with spigot size 60/76 mm
- Inclination angle adjustable from -10° to + 15°
- Dimensions: H = 105 | B = 255 | T = 525 (mm)
- Total weight 4.9 kg
- Can be opened without tools
- Power reduction switching phase ChronoStep, Dali
- Housing color RAL9022, others on request
- Dielectric strength 10kV

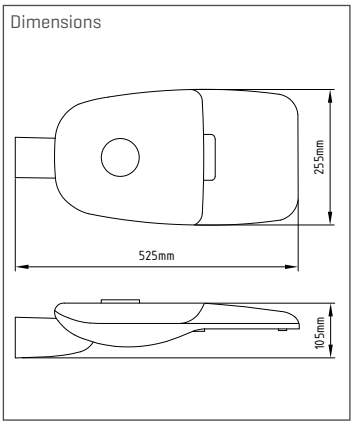

Product number	Lense (●)	Light Color (♦♦)	System performance (W)	System performance typ. (■■W)	LED assembly	System luminous flux (lm)
1701■■00♦♦ME-●AY	S/X/C/B/M/E	27/30/40	7 - 19	07/13/19	1 x 2x4	846 - 2362
1701■■00♦♦ME-●AY	S/X/C/B/M/E	27/30/40	18 - 32	18/22/32	2 x 2x4	2208 - 4175

axhena 1702

- Functional technical design
- ESG luminaire glass
- Optics PMMA lenses in multilayer technology
- Housing made of powder-coated aluminum
- Side-entry, post-top with spigot size 60/76 mm
- Inclination angle adjustable from -10° to + 15°
- Dimensions: H = 105 | B = 290 | T = 625 (mm)
- Total weight 6.7 kg
- Can be opened without tools
- Power reduction switching phase ChronoStep, Dali
- Housing color RAL9022, others on request
- Dielectric strength 10kV

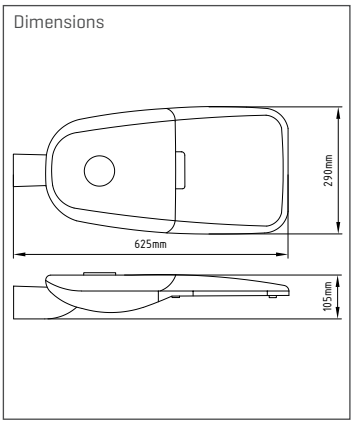

Product number	Lense (●)	Light Color (♦♦)	System performance (W)	System performance typ. (■■W)	LED assembly	System luminous flux (lm)
1702■■00♦♦ME-●AY	S/X/C/B/M/E/R/T/P/V/I	27/30/40	42 - 83	42/52/62/72/82	2 x 2x8	6777-12491

axhena | Technical Street Lights

axhena 1703

- Functional and elegant design
- ESG luminaire glass
- Optics PMMA lenses in multilayer technology
- Housing made of powder-coated aluminum
- Side-entry, post-top with spigot size 60/76 mm
- Inclination angle adjustable from -10° to + 15°
- Dimensions: H = 105 | B = 325 | T = 780 (mm)
- Total weight 9.4 kg
- Can be opened without tools
- Power reduction switching phase ChronoStep, Dali
- Housing color RAL9022, others on request
- Dielectric strength 10kV

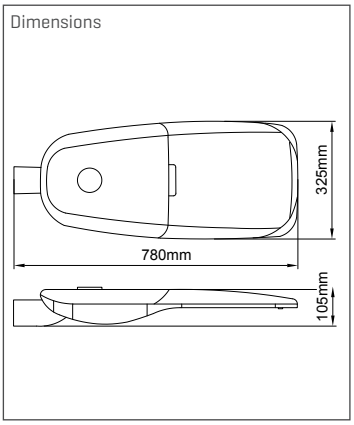

Product number	Lense [●]	Light Color [♦♦]	System performance [W]	System performance typ. [■■W]	LED assembly	System luminous flux [lm]
1703■■00♦♦ME-●AY	S/X/C/B/M/E/V/I/R	27/30/40	100 - 150	100/122/152	3 x 2x8	
1703■■00♦♦ME-●AY	S/X/C/B/M/E/V/I/R	27/30/40	175 - 208	175/208	4 x 2x8	

axares | Decorative Street Lights

axares 1201

- Classic design
- Clear PMMA glass
- Optics PMMA lenses in multilayer technology
- Housing made of powder-coated aluminum
- Dimensions: ø = 386 | H = 514 [mm]
- Total weight 6.6 kg
- Can be opened without tools
- Power reduction switching phase ChronoStep, Dali
- Housing color DB703, others on request
- Dielectric strength 10kV
- Pole mounting traverse optional

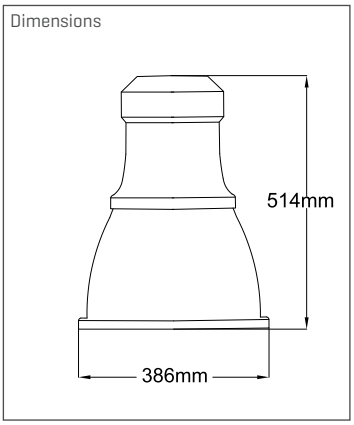

Product number	Lense [●]	Light Color [♦♦]	System performance [W]	System performance typ. [■■W]	LED assembly	System-lichtstrom [lm]
1201■■00♦♦ME-●AY	S/X/C/B/M/E	27/30/40	7 - 19	07/13/19	1 x 2x4	846 - 2362
1201■■00♦♦ME-●AY	S/X/C/B/M/E	27/30/40	18 - 32	18/22/32	2 x 2x4	2208 - 4175
1201■■00♦♦ME-●16	Y/V/M/S/B	AM/27/30/40	7 - 19	07/13/19	1 x 4x8	1144 - 3017
1201■■00♦♦ME-●16	Y/V/M/S/B	AM/27/30/40	18 - 32	18/22/32	2 x 4x8	2985 - 5023

axares 1202

- Classic design
- Clear PMMA glass
- Optics PMMA lenses in multilayer technology
- Housing made of powder-coated aluminum
- Dimensions: H = 465 | ø = 490 [mm]
- Total weight 8.9 kg
- Can be opened without tools
- Power reduction switching phase ChronoStep, Dali
- Housing color DB703, others on request
- Dielectric strength 10kV
- Pole mounting traverse optional

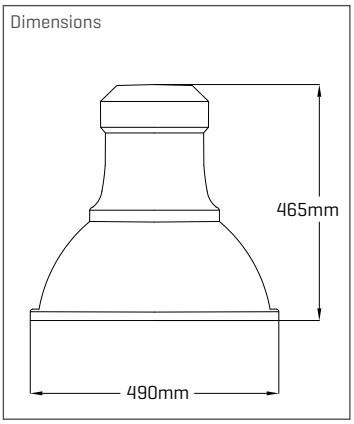

Product number	Lense [●]	Light Color [♦♦]	System performance [W]	System performance typ. [■■W]	LED assembly	System-lichtstrom [lm]
1202■■00♦♦ME-●AY	S/X/C/B/M/E	27/30/40	7 - 19	07/13/19	1 x 2x4	846 - 2362
1202■■00♦♦ME-●AY	S/X/C/B/M/E	27/30/40	18 - 32	18/22/32	2 x 2x4	2208 - 4175
1202■■00♦♦ME-●AY	S/X/C/B/M/E	27/30/40	42 - 62	42/52/62	2 x 2x8	5466 - 8277
1202■■00♦♦ME-●16	Y/V/M/S/B	AM/27/30/40	7 - 19	07/13/19	1 x 4x8	1144 - 3017
1202■■00♦♦ME-●16	Y/V/M/S/B	AM/27/30/40	18 - 32	18/22/32	2 x 4x8	2985 - 5023
1202■■00♦♦ME-●16	Y/V/M/S/B	AM/27/30/40	42 - 62	42/52/62	2 x 4x16	7631 - 10650

axares | Decorative Street Lights

axares 1203

- Classic design
- Clear PMMA glass
- Optics PMMA lenses in multilayer technology
- Housing made of powder-coated aluminum
- Dimensions: H = 573 | ø = 570 [mm]
- Total weight 10.2 kg
- Can be opened without tools
- Power reduction switching phase ChronoStep, Dali
- Housing color DB703, others on request
- Dielectric strength 10kV
- Pole mounting traverse optional

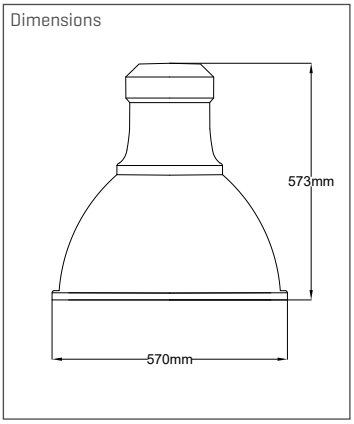

Product number	Lense [●]	Light Color [♦♦]	System performance [W]	System performance typ. [■■W]	LED assembly	System-lichtstrom [lm]
1203■■00♦♦ME-●AY	S/X/C/B/M/E	27/30/40	18 - 32	18/22/32	2 x 2x4	2208 - 4175
1203■■00♦♦ME-●AY	S/X/C/B/M/E	27/30/40	42 - 62	42/52/62	2 x 2x8	5466 - 8277
1203■■00♦♦ME-●16	Y/V/M/S/B	AM/27/30/40	18 - 32	18/22/32	2 x 4x8	2985 - 5023
1203■■00♦♦ME-●16	Y/V/M/S/B	AM/27/30/40	42 - 62	42/52/62	2 x 4x16	7631 - 10650

axares 1801

- Cable light in an elegant design
- ESG luminaire glass
- Optics PMMA lenses in multilayer technology
- Housing made of powder-coated aluminum
- Various rope attachments available
- Dimensions: ø 520 | H = 251 [mm]
- Total weight 7.5 kg
- Can be opened without tools
- Power reduction switching phase ChronoStep, Dali
- Housing color DB703, others on request
- Dielectric strength 10kV

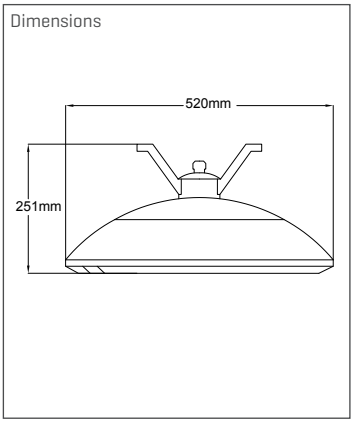

Product number	Lense [●]	Light Color [♦♦]	System performance [W]	System performance typ. [■■W]	LED assembly	System luminous flux [lm]
1801■■00♦♦ME-●AY	N/O/U	30/40/50	7 - 19	07/13/19	1 x 2x4	846 - 2362
1801■■00♦♦ME-●AY	N/O/U	30/40/50	18 - 32	18/22/32	2 x 2x4	2208 - 4175
1801■■00♦♦ME-●AY	N/O/U	27/30/40	42 - 83	42/52/62/72/82	2 x 2x8	5466 - 10360

axares | Decorative Street Lights

axares 1802

- Classic functional technical design
- ESG luminaire glass
- Optics PMMA lenses in multilayer technology
- Housing made of powder-coated aluminum
- Side-entry, post-top with spigot size 60/76 mm
- Inclination angle adjustable from 0 ° to + 90 °
- Dimensions: ø 520 | H = 320 (mm)
- Total weight 7.5 kg
- Can be opened without tools
- Power reduction switching phase ChronoStep, Dali
- Housing color RAL9023, others on request
- Dielectric strength 10kV

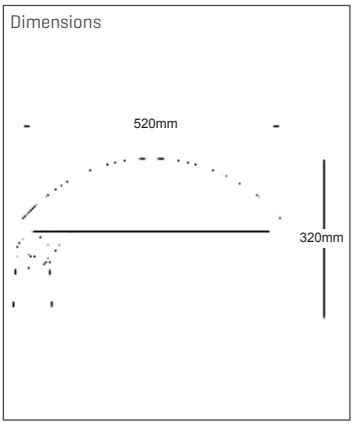

Product number	Lense [●]	Light Color [♦♦]	System performance [W]	System performance typ. [■■W]	LED assembly	System luminous flux [lm]
1802■■00♦♦ME-●AY	S/X/C/B/M/E/R	27/30/40	7 - 19	07/13/19	1 x 2x4	846 - 2362
1802■■00♦♦ME-●AY	S/X/C/B/M/E/R	27/30/40	18 - 32	18/22/32	2 x 2x4	2208 - 4175
1802■■00♦♦ME-●AY	S/X/C/B/M/E/R	27/30/40	42 - 83	42/52/62/72/82	2 x 2x8	5466 - 10360
1802■■00♦♦ME-●16	Y/V/M/S/B	AM/27/30/40	7 - 19	07/13/19	1 x 4x8	1144 - 3017
1802■■00♦♦ME-●16	Y/V/M/S/B	AM/27/30/40	18 - 32	18/22/32	2 x 4x8	2985 - 5023
1802■■00♦♦ME-●16	Y/V/M/S/B	AM/27/30/40	42 - 83	42/52/62/72/82	2 x 4x16	7631 - 13411

axares 1803

- Classic functional technical design
- ESG luminaire glass
- Optics PMMA lenses in multilayer technology
- Housing made of powder-coated aluminum
- Side-entry, post-top with spigot size 60/76 mm
- Dimensions: ø 380 | H = 111.4 (mm)
- Total weight 6.9 kg
- Can be opened without tools
- Power reduction switching phase, ChronoStep, DALI
- Housing color RAL9023, others on request
- Dielectric strength 10kV

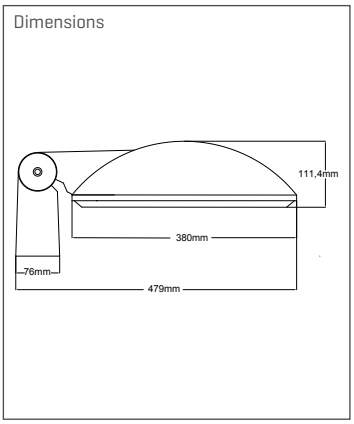

Product number	Lense [●]	Light Color [♦♦]	System performance [W]	System performance typ. [■■W]	LED assembly	System luminous flux [lm]
1803■■00♦♦ME-●AY	S/X/C/B/M/E	27/30/40	7 - 19	07/13/19	1 x 2x4	846 - 2362
1803■■00♦♦ME-●AY	S/X/C/B/M/E	27/30/40	18 - 32	18/22/32	2 x 2x4	2208 - 4175
1803■■00♦♦ME-●AY	S/X/C/B/M/E/R	27/30/40	42	42	2 x 2x8	5466
1802■■00♦♦ME-●16	Y/V/M/S/B	AM/27/30/40	7 - 19	07/13/19	1 x 4x8	1144 - 3017
1802■■00♦♦ME-●16	Y/V/M/S/B	AM/27/30/40	18 - 32	18/22/32	2 x 4x8	2985 - 5023
1803■■00♦♦ME-●16	Y/V/M/S/B	AM/27/30/40	42	42	2 x 4x16	7631

axares | Decorative Street Lights

axares 1901

- Dimensions, beautiful classic street light
- Clear PMMA luminaire glass
- Optics PMMA lenses in multilayer technology
- Housing made of powder-coated aluminum
- optional mounting arm for spigot size 60/76mm
- Dimensions: ø = 500 | H = 490 [mm]
- Total weight 7.8 kg
- can be opened without tools
- Power reduction switching phase, ChronoStep, Dali
- Housing color RAL9005, others on request
- Pole mounting traverse optional

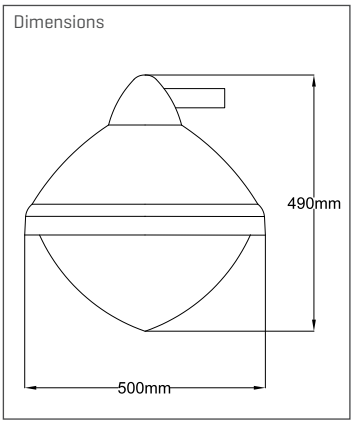

Product number	Lense [●]	Light Color [♦♦]	System performance [W]	System performance typ. [■■W]	LED assembly	System luminous flux [lm]
1901■■00♦♦ME-●AY	S/X/C/B/M/E	27/30/40	7 - 19	07/13/19	1 x 2x4	846 - 2362
1901■■00♦♦ME-●AY	S/X/C/B/M/E	27/30/40	18 - 32	18/22/32	2 x 2x4	2208 - 4175
1901■■00♦♦ME-●AY	S/X/C/B/M/E/R	27/30/40	42	42	2 x 2x8	5466
1901■■00♦♦ME-●16	Y/V/M/S/B	AM/27/30/40	7 - 19	07/13/19	1 x 4x8	1144 - 3017
1901■■00♦♦ME-●16	Y/V/M/S/B	AM/27/30/40	18 - 32	18/22/32	2 x 4x8	2985 - 5023
1901■■00♦♦ME-●16	Y/V/M/S/B	AM/27/30/40	42	42	2 x 4x16	7631

axares 2002

- Classic functional design
- ESG luminaire glass
- Optics PMMA lenses in multilayer technology
- Housing made of powder-coated aluminum
- Post-top with spigot size 60/76 mm
- Dimensions: ø 520 | H = 627 [mm]
- Total weight 8.6 kg
- Can be opened without tools
- Power reduction switching phase, ChronoStep, DALI
- Housing color RAL9023, others on request
- Dielectric strength 10kV

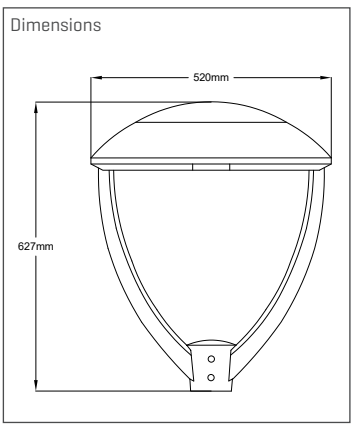

Product number	Lense [●]	Light Color [♦♦]	System performance [W]	System performance typ. [■■W]	LED assembly	System luminous flux [lm]
2002■■00♦♦ME-●AY	S/X/C/B	27/30/40	7 - 19	07/13/19	1 x 2x4	846 - 2362
2002■■00♦♦ME-●AY	S/X/C/B	27/30/40	18 - 32	18/22/32	2 x 2x4	2208 - 4175
2002■■00♦♦ME-●AY	S/X/C/B	27/30/40	42 - 62	42/52/62	2 x 2x8	5466 - 8277
2002■■00♦♦ME-●16	Y/V/M/S/B	AM/27/30/40	7 - 19	7/13/19	1 x 4x8	1144 - 3017
2002■■00♦♦ME-●16	Y/V/M/S/B	AM/27/30/40	18 - 32	18/22/32	2 x 4x8	2985 - 5023
2002■■00♦♦ME-●16	Y/V/M/S/B	AM/27/30/40	42 - 62	42/52/62	2 x 4x16	7631 - 10650

axares | Decorative Street Lights

axares 2003

- Classic functional technical design
- ESG luminaire glass
- Optics PMMA lenses in multilayer technology
- Housing made of powder-coated aluminum
- Side-entry, post-top with spigot size 60/76 mm
- Dimensions: ø 380 | H = 510.5 [mm]
- Total weight 6.8 kg
- Can be opened without tools
- Power reduction switching phase, ChronoStep, DALI
- Housing color RAL9023, others on request
- Dielectric strength 10kV

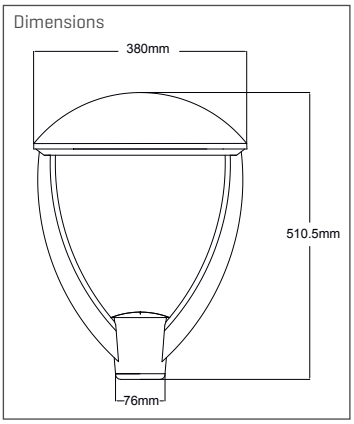

Product number	Lense [●]	Light Color [♦♦]	System performance [W]	System performance typ. [■■W]	LED assembly	System luminous flux [lm]
2003■■00♦♦ME-●AY	S/X/C/B	27/30/40	7 - 19	07/13/19	1 x 2x4	846 - 2362
2003■■00♦♦ME-●AY	S/X/C/B	27/30/40	18 - 32	18/22/32	2 x 2x4	2208 - 4175
2003■■00♦♦ME-●AY	S/X/C/B/M/E	27/30/40	42	42	2 x 2x8	5466
2003■■00♦♦ME-●16	Y/V/M/S/B	AM/27/30/40	7 - 19	7/13/19	1 x 4x8	1144 - 3017
2003■■00♦♦ME-●17	Y/V/M/S/B	AM/27/30/40	18 - 32	18/22/32	2 x 4x8	2985 - 5023
2003■■00♦♦ME-●18	Y/V/M/S/B	AM/27/30/40	42	42	2 x 4x16	7631

axares 2004

- Classic functional design
- ESG luminaire glass
- Optics PMMA lenses in multilayer technology
- Housing made of powder-coated aluminum
- Post-top with spigot size 60/76 mm
- Dimensions: ø 520 | H = 627 [mm]
- Total weight 8.6 kg
- Can be opened without tools
- Power reduction switching phase, ChronoStep, DALI
- Housing color RAL9023, others on request
- Dielectric strength 10kV

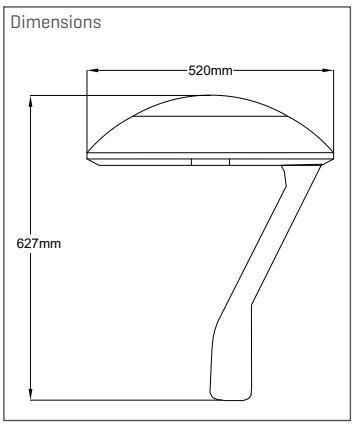

Product number	Lense [●]	Light Color [♦♦]	System performance [W]	System performance typ. [■■W]	LED assembly	System luminous flux [lm]
2004■■00♦♦ME-●AY	S/X/C/B	27/30/40	7 - 19	07/13/19	1 x 2x4	846 - 2362
2004■■00♦♦ME-●AY	S/X/C/B	27/30/40	18 - 32	18/22/32	2 x 2x4	2208 - 4175
2004■■00♦♦ME-●AY	S/X/C/B	27/30/40	42 - 62	42/52/62	2 x 2x8	5466 - 8277
2004■■00♦♦ME-●16	Y/V/M/S/B	AM/27/30/40	7 - 19	7/13/19	1 x 4x8	1144 - 3017
2004■■00♦♦ME-●16	Y/V/M/S/B	AM/27/30/40	18 - 32	18/22/32	2 x 4x8	2985 - 5023
2004■■00♦♦ME-●16	Y/V/M/S/B	AM/27/30/40	42 - 62	42/52/62	2 x 4x16	7631 - 10650

axares | Decorative Street Lights

axares 2006

- Classic conical lamp
- PMMA luminaire glass
- indirect light
- Housing made of powder-coated aluminum
- Post-top with spigot size 60/76 mm
- Dimensions: ø 500 | H = 607 (mm)
- Total weight 8.3 kg
- Can be opened without tools
- Power reduction switching phase, ChronoStep, DALI
- Housing color RAL9005, others on request
- Dielectric strength 10kV

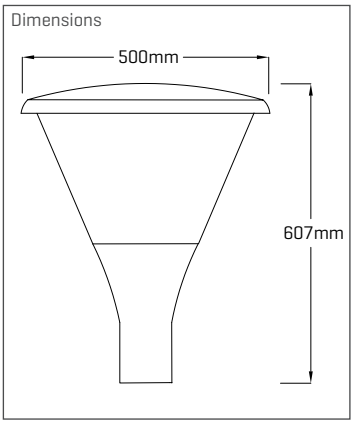

Product number	Lense [●]	Light Color [♦♦]	System performance [W]	System performance typ. [■■W]	LED assembly	System luminous flux [lm]
2006■■00♦♦ME-●AY	C (indirekt)	40	30	30	1x 24	2958

axares | Decorative Street Lights

axares 2005

- Classic functional design
- ESG luminaire glass
- Optics PMMA lenses in multilayer technology
- Housing made of powder-coated aluminum
- Post-top with spigot size 60/76 mm
- Dimensions: ø 490 | H = 600 (mm)
- Total weight 8.6 kg
- Can be opened without tools
- Power reduction switching phase, ChronoStep, DALI
- Switching phase and ChronoStep, DALI
- Housing color RAL9023, others on request
- Dielectric strength 10kV

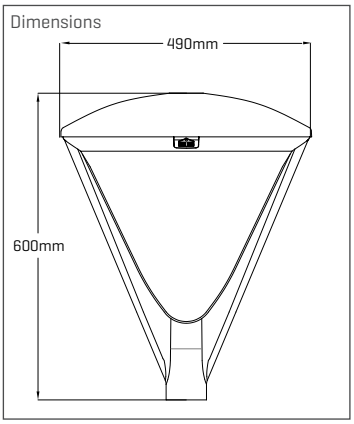

Product number	Lense [●]	Light Color [♦♦]	System performance [W]	System performance typ. [■■W]	LED assembly	System luminous flux [lm]
2005■■00♦♦ME-●AY	S/X/C/B	27/30/40	7 - 19	07/13/19	1 x 2x4	846 - 2362
2005■■00♦♦ME-●AY	S/X/C/B	27/30/40	18 - 32	18/22/32	2 x 2x4	2208 - 4175
2005■■00♦♦ME-●16	Y/V/M/S/B	AM/27/30/40	7 - 19	07/13/19	1 x 4x8	1144 - 3017
2005■■00♦♦ME-●16	Y/V/M/S/B	AM/27/30/40	18 - 32	18/22/32	2 x 4x8	2985 - 5023

axares 2401

- conical lamp
- can be opened without tools
- PMMA luminaire glass, clear or structured
- Optics PMMA lenses in multilayer technology
- Housing made of powder-coated aluminum
- Post-top with spigot size 60/76 mm
- Dimensions: H = 420 | ø = 610 (mm)
- Total weight 8.2 kg
- Degree of protection: IP65, protection class .
- Power reduction switching phase, ChronoStep, Dali
- Housing color DB703, others on request
- Dielectric strength 10kV

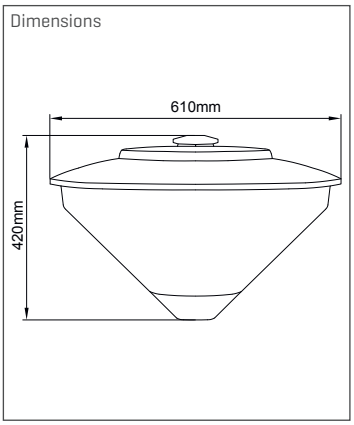

Product number	Lense [●]	Light Color [♦♦]	System performance [W]	System performance typ. [■■W]	LED assembly	System luminous flux [lm]
2401■■00♦♦ME-●AY	S/X/C/B	27/30/40	7 - 19	7/13/19	1 x 2x4	846 - 2362
2401■■00♦♦ME-●AY	S/X/C/B	27/30/40	18 - 32	18/22/32	2 x 2x4	2208 - 4175
2401■■00♦♦ME-●16	Y/V/M/S/B	AM/27/30/40	7 - 19	7/13/19	1 x 4x8	1144 - 3017
2401■■00♦♦ME-●16	Y/V/M/S/B	AM/27/30/40	18 - 32	18/22/32	2 x 4x8	2985 - 5023

axares | Decorative Street Lights

axares 2101

- Classic lantern-shaped lamp
- Luminaire glass PMMA clear / satined
- Optics PMMA lenses in multilayer technology
- Housing made of powder-coated aluminum
- Post-top with spigot size 60/76 mm
- Dimensions: ø = 605 | H = 530 [mm]
- Total weight 8.8 kg
- Can be opened without tools
- Power reduction switching phase, ChronoStep, Dali
- Housing color DB703, others on request
- Dielectric strength 10kV

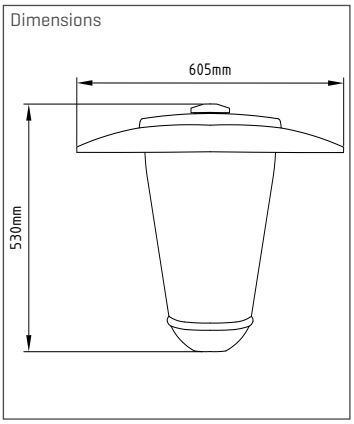

Product number	Lense [●]	Light Color [♦♦]	System performance [W]	System performance typ. [■■W]	LED assembly	System luminous flux [lm]
2101■■00♦♦ME-●AY	S/X/C/B	27/30/40	7 - 19	07/13/19	1 x 2x4	846 - 2362
2101■■00♦♦ME-●AY	S/X/C/B	27/30/40	18 - 32	18/22/32	2 x 2x4	2208 - 4175
2101■■00♦♦ME-●16	Y/V/M/S/B	AM/27/30/40	7 - 19	7/13/19	1 x 4x8	1144 - 3017
2101■■00♦♦ME-●16	Y/V/M/S/B	AM/27/30/40	18 - 32	18/22/32	2 x 4x8	2985 - 5023

axares 2102

- Classic lantern-shaped lamp
- Luminaire glass PMMA clear or satined
- Optics PMMA lenses in multilayer technology
- Housing made of powder-coated aluminum
- Post-top with spigot size 60/76 mm
- Dimensions: ø = 595 | H = 550 [mm]
- Total weight 8.8 kg
- Can be opened without tools
- Power reduction switching phase, ChronoStep, Dali
- Housing color DB703, others on request
- Dielectric strength 10kV

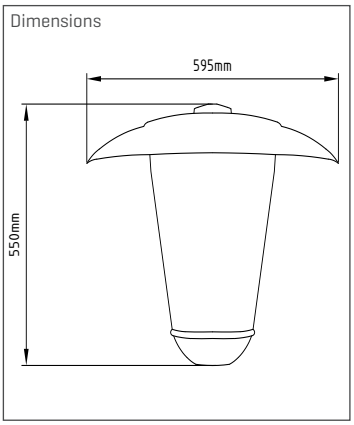

Product number	Lense [●]	Light Color [♦♦]	System performance [W]	System performance typ. [■■W]	LED assembly	System luminous flux [lm]
2102■■00♦♦ME-●AY	S/X/C/B	27/30/40	7 - 19	07/13/19	1 x 2x4	846 - 2362
2102■■00♦♦ME-●AY	S/X/C/B	27/30/40	18 - 32	18/22/32	2 x 2x4	2208 - 4175
2102■■00♦♦ME-●16	Y/V/M/S/B	AM/27/30/40	7 - 19	07/13/19	1 x 4x8	1144 - 3017
2102■■00♦♦ME-●16	Y/V/M/S/B	AM/27/30/40	18 - 32	18/22/32	2 x 4x8	2985 - 5023

axares | Decorative Street Lights

axares 2103

- Classic lantern-shaped lamp
- Luminaire glass PMMA clear or satined
- Optics PMMA lenses in multilayer technology
- Housing made of powder-coated aluminum
- Post-top with spigot size 60/76 mm
- Dimensions: ø = 505 | H = 600 [mm]
- Total weight 8.8 kg
- Can be opened without tools
- Power reduction switching phase, ChronoStep, Dali
- Housing color DB703, others on request
- Dielectric strength 10kV

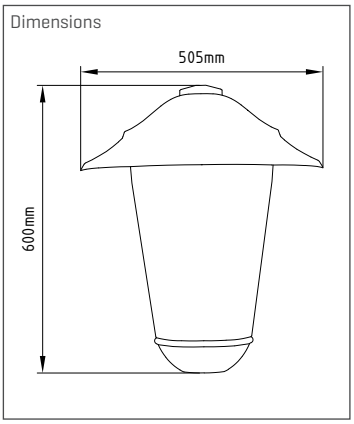

Product number	Lense [●]	Light Color [♦♦]	System performance [W]	System performance typ. [■■W]	LED assembly	System luminous flux [lm]
2103■■00♦♦ME-●AY	S/X/C/B	27/30/40	7 - 19	07/13/19	1 x 2x4	846 - 2362
2103■■00♦♦ME-●AY	S/X/C/B	27/30/40	18 - 32	18/22/32	2 x 2x4	2208 - 4175
2103■■00♦♦ME-●16	Y/V/M/S/B	AM/27/30/40	7 - 19	07/13/19	1 x 4x8	1144 - 3017
2103■■00♦♦ME-●16	Y/V/M/S/B	AM/27/30/40	18 - 32	18/22/32	2 x 4x8	2985 - 5023

axares 2104

- Classic lantern-shaped lamp
- Luminaire glass PMMA clear or satined
- Optics PMMA lenses in multilayer technology
- Housing made of powder-coated aluminum, copper roof
- Post-top with spigot size 60/76 mm
- Dimensions: ø = 505 | H = 610 [mm]
- Total weight 8.8 kg
- Can be opened without tools
- Power reduction switching phase, ChronoStep, Dali
- Housing color DB703, others on request
- Dielectric strength 10k

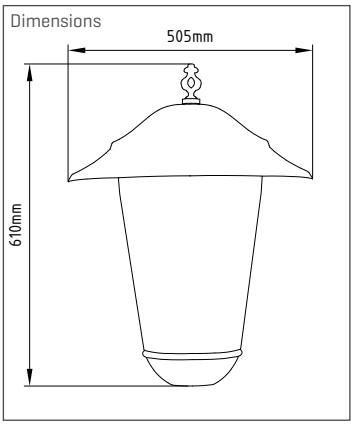

Product number	Lense [●]	Light Color [♦♦]	System performance [W]	System performance typ. [■■W]	LED assembly	System luminous flux [lm]
2104■■00♦♦ME-●AY	S/X/C/B	27/30/40	7 - 19	07/13/19	1 x 2x4	846 - 2362
2104■■00♦♦ME-●AY	S/X/C/B	27/30/40	18 - 32	18/22/32	2 x 2x4	2208 - 4175
2104■■00♦♦ME-●16	Y/V/M/S/B	AM/27/30/40	7 - 19	07/13/19	1 x 4x8	1144 - 3017
2104■■00♦♦ME-●16	Y/V/M/S/B	AM/27/30/40	18 - 32	18/22/32	2 x 4x8	2985 - 5023

axares | Decorative Street Lights

axares 2201

- Classic lantern-shaped lamp
- Luminaire glass PMMA clear or satined
- Optics PMMA lenses in multilayer technology
- Housing made of powder-coated aluminum
- Post-top with spigot size 60/76 mm
- Dimensions: H = 603 | ø = 700 [mm]
- Total weight 7.6 kg
- Degree of protection: IP65, protection class I
- Power reduction switching phase, ChronoStep, Dali
- Housing color DB703, others on request
- Dielectric strength 10kV

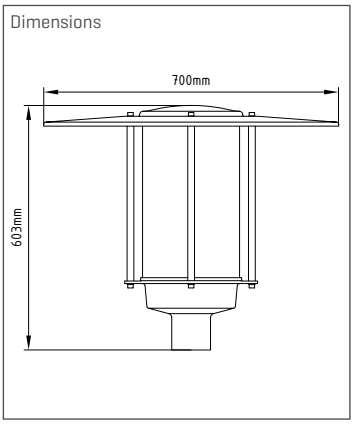

Product number	Lense [●]	Light Color [♦♦]	System performance [W]	System performance typ. [■■W]	LED assembly	System luminous flux [lm]
2201■■00♦♦ME-●AY	S/X/C/B	27/30/40	7 - 19	07/13/19	1 x 2x4	846 - 2362
2201■■00♦♦ME-●AY	S/X/C/B	27/30/40	18 - 32	18/22/32	2 x 2x4	2208 - 4175
2201■■00♦♦ME-●16	Y/V/M/S/B	AM/27/30/40	7 - 19	07/13/19	1 x 4x8	1144 - 3017
2201■■00♦♦ME-●16	Y/V/M/S/B	AM/27/30/40	18 - 32	18/22/32	2 x 4x8	2985 - 5023

axares 2202

- Classic lantern-shaped lamp
- Luminaire glass PMMA clear or satined
- Optics PMMA lenses in multilayer technology
- Housing made of powder-coated aluminum
- Post-top with spigot size 60/76 mm
- Dimensions: H = 606 | ø = 700 [mm]
- Total weight 7.6 kg
- Degree of protection: IP65, protection class I
- Power reduction switching phase, ChronoStep, Dali
- Housing color DB703, others on request
- Dielectric strength 10kV

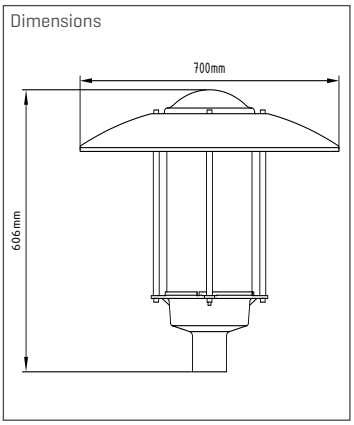

Product number	Lense [●]	Light Color [♦♦]	System performance [W]	System performance typ. [■■W]	LED assembly	System luminous flux [lm]
2202■■00♦♦ME-●AY	S/X/C/B	27/30/40	7 - 19	07/13/19	1 x 2x4	846 - 2362
2202■■00♦♦ME-●AY	S/X/C/B	27/30/40	18 - 32	18/22/32	2 x 2x4	2208 - 4175
2202■■00♦♦ME-●16	Y/V/M/S/B	AM/27/30/40	7 - 19	7/13/19	1 x 4x8	1144 - 3017
2202■■00♦♦ME-●16	Y/V/M/S/B	AM/27/30/40	18 - 32	18/22/32	2 x 4x8	2985 - 5023

axares | Decorative Street Lights

axares 2203

- Classic lantern-shaped lamp
- Luminaire glass PMMA clear or satined
- Optics PMMA lenses in multilayer technology
- Housing made of powder-coated aluminum
- Post-top with spigot size 60/76 mm
- Dimensions: H = 625 | ø = 700 [mm]
- Total weight 8.6 kg
- Degree of protection: IP65, protection class I
- Power reduction switching phase, ChronoStep, Dali
- Housing color DB703, others on request
- Dielectric strength 10kV

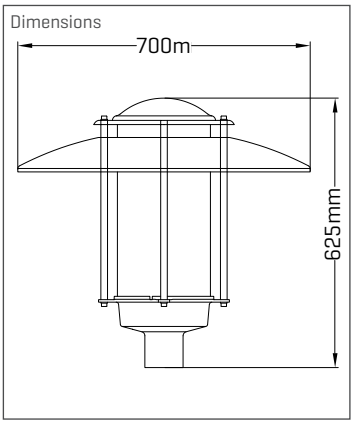

Product number	Lense [●]	Light Color [♦♦]	System performance [W]	System performance typ. [■■W]	LED assembly	System luminous flux [lm]
2203■■00♦♦ME-●AY	S/X/C/B	27/30/40	7 - 19	07/13/19	1 x 2x4	846 - 2362
2203■■00♦♦ME-●AY	S/X/C/B	27/30/40	18 - 32	18/22/32	2 x 2x4	2208 - 4175
2203■■00♦♦ME-●16	Y/V/M/S/B	AM/27/30/40	7 - 19	7/13/19	1 x 4x8	1144 - 3017
2203■■00♦♦ME-●16	Y/V/M/S/B	AM/27/30/40	18 - 32	18/22/32	2 x 4x8	2985 - 5023

axares 2204

- Classic lantern-shaped lamp
- Luminaire glass PMMA clear or satined
- Optics PMMA lenses in multilayer technology
- Housing made of powder-coated aluminum
- Post-top with spigot size 60/76 mm
- Dimensions: H = 603 | ø = 400 [mm]
- Total weight 7.8 kg
- Degree of protection: IP65, protection class I
- Power reduction switching phase, ChronoStep, Dali
- Housing color DB703, others on request
- Dielectric strength 10kV

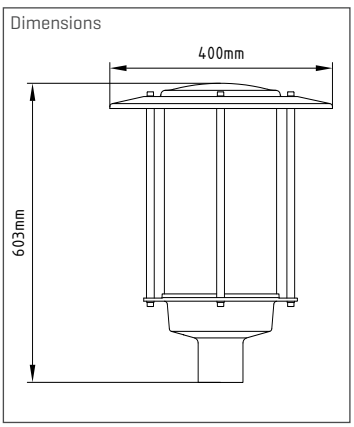

Product number	Lense [●]	Light Color [♦♦]	System performance [W]	System performance typ. [■■W]	LED assembly	System luminous flux [lm]
2204■■00♦♦ME-●AY	S/X/C/B	27/30/40	7 - 19	7/13/19	1 x 2x4	846 - 2362
2204■■00♦♦ME-●AY	S/X/C/B	27/30/40	18 - 32	18/22/32	2 x 2x4	2208 - 4175
2204■■00♦♦ME-●16	Y/V/M/S/B	AM/27/30/40	7 - 19	7/13/19	1 x 4x8	1144 - 3017
2204■■00♦♦ME-●16	Y/V/M/S/B	AM/27/30/40	18 - 32	18/22/32	2 x 4x8	2985 - 5023

axares | Decorative Street Lights

axares 2205

- Classic lantern-shaped lamp
- Luminaire glass PMMA clear or satined
- Optics PMMA lenses in multilayer technology
- Housing made of powder-coated aluminum
- Post-top with spigot size 60/76 mm
- Dimensions: H = 603 | ø = 700 [mm]
- Total weight 8.6 kg
- Degree of protection: IP65, protection class I
- Power reduction switching phase, ChronoStep, Dali
- Housing color DB703, others on request
- Dielectric strength 10kV

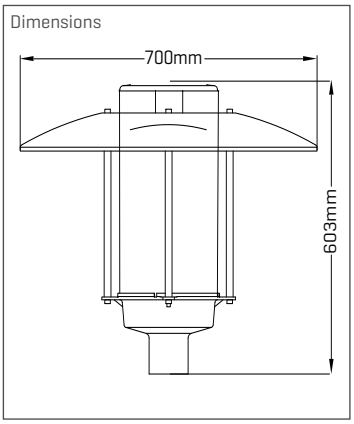

Product number	Lense [●]	Light Color [♦♦]	System performance [W]	System performance typ. [■■W]	LED assembly	System luminous flux [lm]
2205■■00♦♦ME-●AY	S/X/C/B	27/30/40	7 - 19	7/13/19	1 x 2x4	846 - 2362
2205■■00♦♦ME-●AY	S/X/C/B	27/30/40	18 - 32	18/22/32	2 x 2x4	2208 - 4175
2205■■00♦♦ME-●16	Y/V/M/S/B	AM/27/30/40	7 - 19	7/13/19	1 x 4x8	1144 - 3017
2205■■00♦♦ME-●16	Y/V/M/S/B	AM/27/30/40	18 - 32	18/22/32	2 x 4x8	2985 - 5023

axares 2301

- Classic lantern-shaped lamp
- Luminaire glass PMMA clear or satined
- Optics PMMA lenses in multilayer technology
- Housing made of powder-coated aluminum
- Post-top with spigot size 60/76 mm
- Dimensions: H = 618 | ø = 700 [mm]
- Total weight 7.2 kg
- Degree of protection: IP65, protection class I
- Power reduction switching phase, ChronoStep, Dali
- Housing color DB703, others on request
- Dielectric strength 10kV

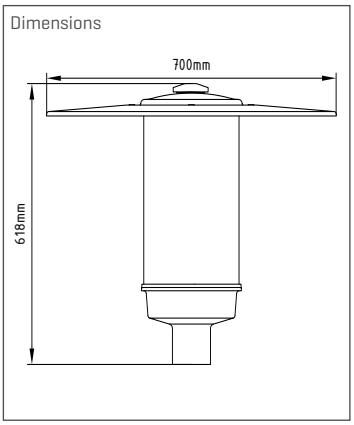

Product number	Lense [●]	Light Color [♦♦]	zzz	System performance typ. [■■W]	LED assembly	System luminous flux [lm]
2301■■00♦♦ME-●AY	S/X/C/B	27/30/40	7 - 19	07/13/19	1 x 2x4	846 - 2362
2301■■00♦♦ME-●AY	S/X/C/B	27/30/40	18 - 32	18/22/32	2 x 2x4	2208 - 4175
2301■■00♦♦ME-●16	Y/V/M/S/B	AM/27/30/40	7 - 19	07/13/19	1 x 4x8	1144 - 3017
2301■■00♦♦ME-●16	Y/V/M/S/B	AM/27/30/40	18 - 32	18/22/32	2 x 4x8	2985 - 5023

axares | Decorative Street Lights

axares 2302

- Classic lantern-shaped lamp
- Luminaire glass PMMA clear or satined
- Optics PMMA lenses in multilayer technology
- Housing made of powder-coated aluminum
- Post-top with spigot size 60/76 mm
- Dimensions: H = 606 | ø = 700 [mm]
- Total weight 7.2 kg
- Degree of protection: IP65, protection class I
- Power reduction switching phase, ChronoStep, Dali
- Housing color DB703, others on request
- Dielectric strength 10kV

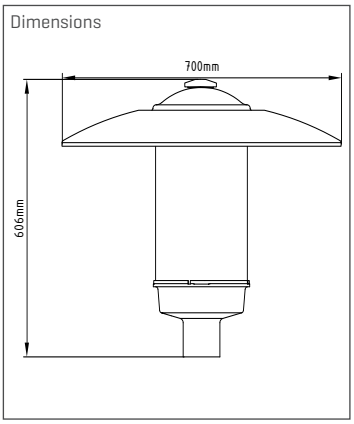

Product number	Lense [●]	Light Color [♦♦]	System performance [W]	System performance typ. [■■W]	LED assembly	System luminous flux [lm]
2302■■00♦♦ME-●AY	S/X/C/B	27/30/40	7 - 19	07/13/19	1 x 2x4	846 - 2362
2302■■00♦♦ME-●AY	S/X/C/B	27/30/40	18 - 32	18/22/32	2 x 2x4	2208 - 4175
2302■■00♦♦ME-●16	Y/V/M/S/B	AM/27/30/40	7 - 19	07/13/19	1 x 4x8	1144 - 3017
2302■■00♦♦ME-●16	Y/V/M/S/B	AM/27/30/40	18 - 32	18/22/32	2 x 4x8	2985 - 5023

axares 2303

- Classic lantern-shaped lamp
- Luminaire glass PMMA clear or satined
- Optics PMMA lenses in multilayer technology
- Housing made of powder-coated aluminum
- Post-top with spigot size 60/76 mm
- Dimensions: H = 600 | ø = 240 [mm]
- Total weight 7.2 kg
- Degree of protection: IP65, protection class I
- Power reduction switching phase, ChronoStep, Dali
- Housing color DB703, others on request
- Dielectric strength 10kV

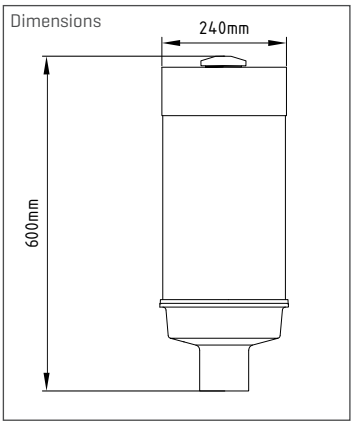

Product number	Lense [●]	Light Color [♦♦]	System performance [W]	System performance typ. [■■W]	LED assembly	System luminous flux [lm]
2303■■00♦♦ME-●AY	S/X/C/B	27/30/40	7 - 19	07/13/19	1 x 2x4	846 - 2362
2303■■00♦♦ME-●AY	S/X/C/B	27/30/40	18 - 32	18/22/32	2 x 2x4	2208 - 4175
2303■■00♦♦ME-●16	Y/V/M/S/B	AM/27/30/40	7 - 19	07/13/19	1 x 4x8	1144 - 3017
2303■■00♦♦ME-●16	Y/V/M/S/B	AM/27/30/40	18 - 32	18/22/32	2 x 4x8	2985 - 5023

axares | Decorative Street Lights

axares 2304

- Classic lantern-shaped lamp
- Luminaire glass PMMA clear or satined
- Optics PMMA lenses in multilayer technology
- Housing made of powder-coated aluminum
- Post-top with spigot size 60/76 mm
- Dimensions: H = 550 | ø = 500 [mm]
- Total weight 7.2 kg
- Degree of protection: IP65, protection class I
- Power reduction switching phase, ChronoStep, Dali
- Housing color RAL9005, others on request
- Dielectric strength 10kV

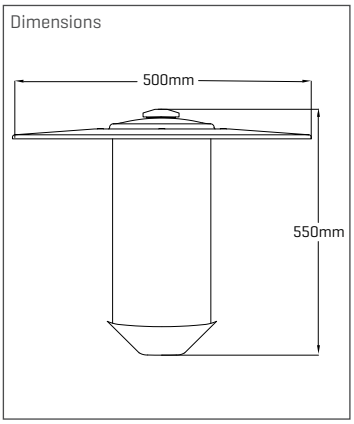

Product number	Lense [●]	Light Color [♦♦]	System performance [W]	System performance typ. [■■W]	LED assembly	System luminous flux [lm]
2304■■00♦♦ME-●AY	S/X/C/B	27/30/40	7 - 19	07/13/19	1 x 2x4	846 - 2362
2304■■00♦♦ME-●AY	S/X/C/B	27/30/40	18 - 32	18/22/32	2 x 2x4	2208 - 4175
2304■■00♦♦ME-●16	Y/V/M/S/B	AM/27/30/40	7 - 19	07/13/19	1 x 4x8	1144 - 3017
2304■■00♦♦ME-●16	Y/V/M/S/B	AM/27/30/40	18 - 32	18/22/32	2 x 4x8	2985 - 5023

axares 2501

- Elegant classic lamp
- Clear PMMA glass
- Optics PMMA lenses in multilayer technology
- Housing made of powder-coated aluminum
- Post-top with spigot size 60/76 mm
- Dimensions: H = 645 | ø = 650 [mm]
- Total weight 10.7 kg
- Degree of protection: IP65, protection class I
- Power reduction switching phase, ChronoStep, Dali
- Housing color DB703, others on request
- Dielectric strength 10kV

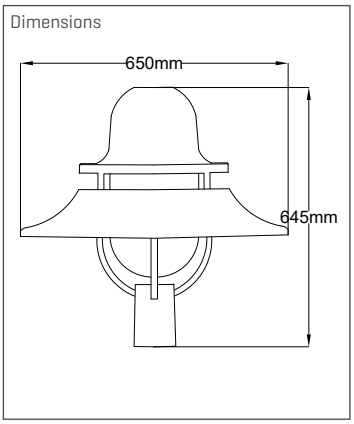

Product number	Lense [●]	Light Color [♦♦]	System performance [W]	System performance typ. [■■W]	LED assembly	System luminous flux [lm]
2501■■00♦♦ME-●AY	S/X/C/B	27/30/40	7 - 19	7/13/19	1 x 2x4	846 - 2362
2501■■00♦♦ME-●AY	S/X/C/B	27/30/40	18 - 32	18/22/32	2 x 2x4	2208 - 4175
2501■■00♦♦ME-●16	Y/V/M/S/B	AM/27/30/40	7 - 19	7/13/19	1 x 4x8	1144 - 3017
2501■■00♦♦ME-●16	Y/V/M/S/B	AM/27/30/40	18 - 32	18/22/32	2 x 4x8	2985 - 5023

axares | Decorative Street Lights

axares 2601

- Ball lamp
- Clear PMMA glass
- Optics PMMA lenses in multilayer technology
- Housing made of powder-coated aluminum
- Post-top with spigot size 60/76 mm
- Dimensions: H = 560 | ø = 507 [mm]
- Total weight 7.5 kg
- Degree of protection: IP65, protection class I
- Power reduction switching phase, ChronoStep, Dali
- Housing color RAL9005, others on request
- Dielectric strength 10kV

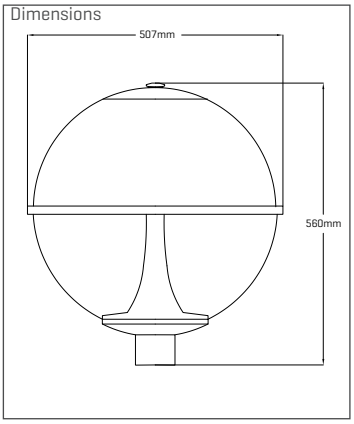

Product number	Lense [●]	Light Color [♦♦]	System performance [W]	System performance typ. [■■W]	LED assembly	System luminous flux [lm]
2601■■00♦♦ME-●AY	S/X/C/B	27/30/40	7 - 19	07/13/19	1 x 2x4	846 - 2362
2601■■00♦♦ME-●AY	S/X/C/B	27/30/40	18 - 32	18/22/32	2 x 2x4	2208 - 4175
2601■■00♦♦ME-●16	Y/V/M/S/B	AM/27/30/40	7 - 19	07/13/19	1 x 4x8	1144 - 3017
2601■■00♦♦ME-●16	Y/V/M/S/B	AM/27/30/40	18 - 32	18/22/32	2 x 4x8	2985 - 5023

axares 2801

- Ball lamp
- Luminaire glass PMMA satined or opal
- Optics PMMA lenses in multilayer technology
- Mast attachment piece made of plastic, RAL 9005 - black
- Post-top with 60mm spigot
- Dimensions: H = 550 | ø = 400 [mm]
- Total weight 6.5 kg
- Degree of protection: IP65, protection class I
- Power reduction switching phase, ChronoStep, Dali
- Dielectric strength 10kV

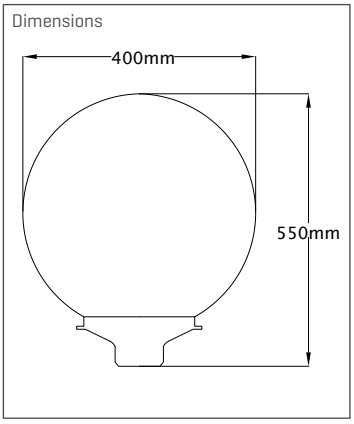

Product number	Lense [●]	Light Color [♦♦]	System performance [W]	System performance typ. [■■W]	LED assembly	System luminous flux [lm]
2801■■00♦♦ME-●AY	S/X/C/B	27/30/40	7 - 19	7/13/19	1 x 2x4	846 - 2362
2801■■00♦♦ME-●AY	S/X/C/B	27/30/40	18 - 32	18/22/32	2 x 2x4	2208 - 4175
2801■■00♦♦ME-●16	Y/V/M/S/B	AM/27/30/40	7 - 19	7/13/19	1 x 4x8	1144 - 3017
2801■■00♦♦ME-●16	Y/V/M/S/B	AM/27/30/40	18 - 32	18/22/32	2 x 4x8	2985 - 5023

axares | Decorative Street Lights

axares 3001

- Historical lamp
- PMMA luminaire glass, clear or structured
- Optics PMMA lenses in multilayer technology
- Housing made of powder-coated aluminum
- Post-top with spigot size 60/76 mm
- Dimensions: H = 780 | B = 420 | T = 420 (mm)
- Total weight 8.8 kg
- Degree of protection: IP65, protection class I
- Power reduction switching phase ChronoStep, Dali
- Housing color RAL9005, others on request
- Dielectric strength 10kV

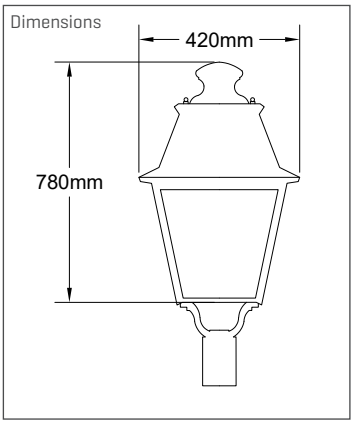

Product number	Lense (●)	Light Color (♦♦)	System performance (W)	System performance typ. (■■W)	LED assembly	System luminous flux (lm)
3001■■00♦♦ME-●AY	S/X/C/B	27/30/40	7 - 19	7/13/19	1 x 2x4	846 - 2362
3001■■00♦♦ME-●AY	S/X/C/B	27/30/40	18 - 32	18/22/32	2 x 2x4	2208 - 4175
3001■■00♦♦ME-●16	Y/V/M/S/B	AM/27/30/40	7 - 19	7/13/19	1 x 4x8	1144 - 3017
3001■■00♦♦ME-●16	Y/V/M/S/B	AM/27/30/40	18 - 32	18/22/32	2 x 4x8	2985 - 5023

axares 3002

- Historical lamp
- PMMA luminaire glass, clear or structured
- Optics PMMA lenses in multilayer technology
- Housing made of pure copper
- Post-top with spigot size 60/76 mm
- Dimensions: H = 780 | B = 420 | T = 420 (mm)
- Total weight 9.3 kg
- Degree of protection: IP65, protection class I
- Power reduction switching phase ChronoStep, Dali
- Housing color copper with protective lacquer
- Dielectric strength 10kV

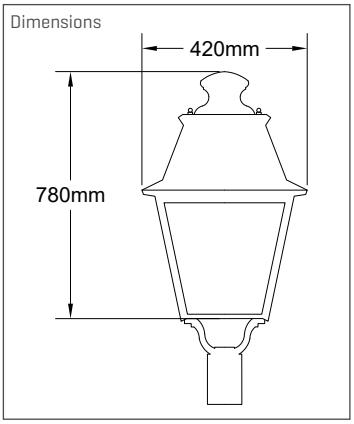

Product number	Lense (●)	Light Color (♦♦)	System performance (W)	System performance typ. (■■W)	LED assembly	System luminous flux (lm)
3002■■00♦♦ME-●AY	S/X/C/B	27/30/40	7 - 19	07/13/19	1 x 2x4	846 - 2362
3002■■00♦♦ME-●AY	S/X/C/B	27/30/40	18 - 32	18/22/32	2 x 2x4	2208 - 4175
3002■■00♦♦ME-●16	Y/V/M/S/B	AM/27/30/40	7 - 19	07/13/19	1 x 4x8	1144 - 3017
3002■■00♦♦ME-●16	Y/V/M/S/B	AM/27/30/40	18 - 32	18/22/32	2 x 4x8	2985 - 5023

axares | Decorative Street Lights

axares 3201

- Historical light hexagonal
- Clear ESG luminaire glass or cathedral glass
- Optics PMMA lenses in multilayer technology
- Housing made of powder-coated aluminum
- Post-top with spigot size 60/76 mm
- Dimensions: H = 1020 | B = 420 (mm)
- Total weight 10.8 kg
- Degree of protection: IP65, protection class I
- Power reduction switching phase ChronoStep, Dali
- Housing color RAL9005, others on request
- Dielectric strength 10kV

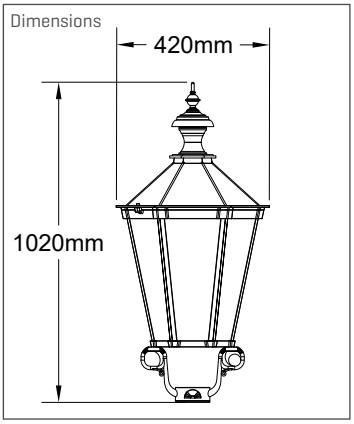

Product number	Lense (●)	Light Color (♦♦)	System performance (W)	System performance typ. (■■W)	LED assembly	System luminous flux (lm)
3201■■00♦♦ME-●AY	S/X/C/B	27/30/40	7 - 19	7/13/19	1 x 2x4	846 - 2362
3201■■00♦♦ME-●AY	S/X/C/B	27/30/40	18 - 32	18/22/32	2 x 2x4	2208 - 4175
3201■■00♦♦ME-●16	Y/V/M/S/B	AM/27/30/40	7 - 19	7/13/19	1 x 4x8	1144 - 3017
3201■■00♦♦ME-●16	Y/V/M/S/B	AM/27/30/40	18 - 32	18/22/32	2 x 4x8	2985 - 5023

axares 3101

- Gas lamp shape
- Clear PMMA glass
- Optics PMMA lenses in multilayer technology
- Gas lanterns - look including imitation gas socks
- One-piece housing made of pressed aluminum
- Post-top with spigot size 60/76 mm
- Dimensions: Dimensions: ø = 415 | H = 530 (mm)
- Total weight 8.9 kg
- Degree of protection: IP65, protection class I
- Power reduction switching phase ChronoStep, Dali
- Housing color RAL9005
- Dielectric strength 10kV

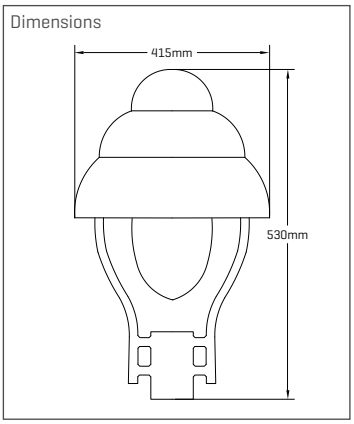

Product number	Lense (●)	Light Color (♦♦)	System performance (W)	System performance typ. (■■W)	LED assembly	System luminous flux (lm)
3101■■00♦♦ME-●AY	S/X/C/B	27/30/40	7 - 19	07/13/19	1 x 2x4	846 - 2362
3101■■00♦♦ME-●AY	S/X/C/B	27/30/40	18 - 32	18/22/32	2 x 2x4	2208 - 4175
3101■■00♦♦ME-●16	Y/V/M/S/B	AM/27/30/40	7 - 19	07/13/19	1 x 4x8	1144 - 3017
3101■■00♦♦ME-●16	Y/V/M/S/B	AM/27/30/40	18 - 32	18/22/32	2 x 4x8	2985 - 5023

axares | Decorative Street Lights

axares 3102

- Gas lamp shape
- Luminaire glass PMMA clear or satined
- Optics PMMA lenses in multilayer technology
- One-piece housing made of pressed aluminum
- Post-top with spigot size 60/76 mm
- Dimensions: ø = 415 | H = 530 (mm)
- Total weight 8.9 kg
- Degree of protection: IP65, protection class I
- Power reduction switching phase ChronoStep, Dali
- Housing color RAL9005
- Dielectric strength 10kV

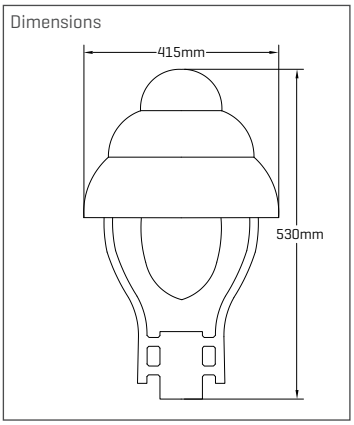

Product number	Lense (●)	Light Color (♦♦)	System performance (W)	System performance typ. (■■W)	LED assembly	System luminous flux (lm)
3102■■00♦♦ME-●AY	S/X/C/B	27/30/40	7 - 19	07/13/19	1 x 2x4	846 - 2362
3102■■00♦♦ME-●AY	S/X/C/B	27/30/40	18 - 32	18/22/32	2 x 2x4	2208 - 4175
3102■■00♦♦ME-●16	Y/V/M/S/B	AM/27/30/40	7 - 19	07/13/19	1 x 4x8	1144 - 3017
3102■■00♦♦ME-●16	Y/V/M/S/B	AM/27/30/40	18 - 32	18/22/32	2 x 4x8	2985 - 5023

axares 3401

- Historical lamp
- Luminaire glass PMMA smooth, clear, polycarbonate optional on request
- Optics PMMA lenses in multilayer technology
- Housing made of pressed aluminum RAL 9005 - black
- Patented cone adapter KG ½ made of stainless steel,
- with cable gland for bracket mounting
- Mounting adapter ½", ¾" or 1" made of stainless steel
- More individually optionally available
- Dimensions: H = 655 | ø = 535 (mm)
- Total weight 8.3 kg
- Degree of protection: IP65, protection class I
- Power reduction switching phase ChronoStep, Dali
- Dielectric strength 10kV

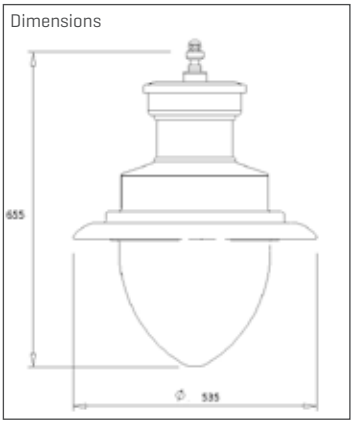

Product number	Lense (●)	Light Color (♦♦)	System performance (W)	System performance typ. (■■W)	LED assembly	System luminous flux (lm)
3401■■00♦♦ME-●AY	S/X/C/B/M/E	27/30/40	7 - 19	07/13/19	1 x 2x4	846 - 2362
3401■■00♦♦ME-●AY	S/X/C/B/M/E	27/30/40	18 - 32	18/22/32	2 x 2x4	2208 - 4175
3401■■00♦♦ME-●16	Y/V/M/S/B	AM/27/30/40	7 - 19	7/13/19	1 x 4x8	1144 - 3017
3401■■00♦♦ME-●16	Y/V/M/S/B	AM/27/30/40	18 - 32	18/22/32	2 x 4x8	2985 - 5023

axtheas | Hanging Lights

axtheas 4001

- Elegant classic hanging lamp
- Clear PMMA glass
- Optics PMMA lenses in multilayer technology
- Housing made of powder-coated aluminum
- Patented cone adapter KG ½ made of stainless steel, with cable gland for bracket mounting
- Mounting adapter ½", ¾" or 1" made of stainless steel more individually optionally available
- Dimensions: ø = 540 | H = 357 [mm]
- Total weight 7.6 kg
- Can be opened without tools
- Power reduction switching phase, ChronoStep, Dali
- Housing color DB703, others on request
- Dielectric strength 10kV

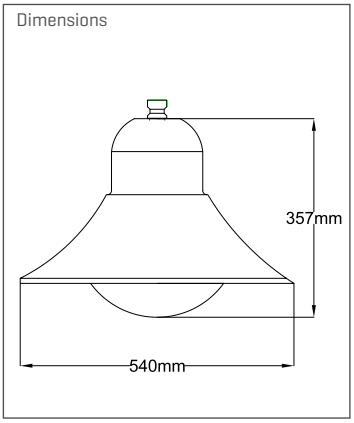

Product number	Lense [●]	Light Color [♦♦]	System performance [W]	System performance typ. [■■W]	LED assembly	System luminous flux [lm]
4001■■00♦♦ME-●AY	S/X/C/B/M/E	27/30/40	7 - 19	07/13/19	1 x 2x4	846 - 2362
4001■■00♦♦ME-●AY	S/X/C/B/M/E	27/30/40	18 - 32	18/22/32	2 x 2x4	2208 - 4175
4001■■00♦♦ME-●AY	S/X/C/B/M/E	27/30/40	42	42	2 x 2x8	5466
4001■■00♦♦ME-●16	Y/V/M/S/B	AM/27/30/40	7 - 19	07/13/19	1 x 4x8	1144 - 3017
4001■■00♦♦ME-●17	Y/V/M/S/B	AM/27/30/40	18 - 32	18/22/32	2 x 4x8	2985 - 5023
4001■■00♦♦ME-●18	Y/V/M/S/B	AM/27/30/40	42	42	2 x 4x16	7631

axtheas 4101

- Elegant classic hanging lamp
- Clear PMMA glass
- Optics PMMA lenses in multilayer technology
- Housing made of powder-coated aluminum
- Patented cone adapter KG ½ made of stainless steel, with cable gland for bracket mounting
- Mounting adapter ½", ¾" or 1" made of stainless steel more individually optionally available
- Dimensions: ø = 560 | H = 357 [mm]
- Total weight 7.8 kg
- Can be opened without tools
- Power reduction switching phase, ChronoStep, Dali
- Housing color DB703, others on request
- Dielectric strength 10kV

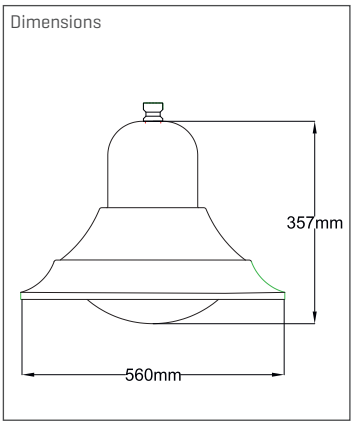

Product number	Lense [●]	Light Color [♦♦]	System performance [W]	System performance typ. [■■W]	LED assembly	System luminous flux [lm]
4101■■00♦♦ME-●AY	S/X/C/B/M/E	27/30/40	7 - 19	07/13/19	1 x 2x4	846 - 2362
4101■■00♦♦ME-●AY	S/X/C/B/M/E	27/30/40	18 - 32	18/22/32	2 x 2x4	2208 - 4175
4101■■00♦♦ME-●AY	S/X/C/B/M/E	27/30/40	42	42	2 x 2x8	5466
4101■■00♦♦ME-●16	Y/V/M/S/B	AM/27/30/40	7 - 19	07/13/19	1 x 4x8	1144 - 3017
4101■■00♦♦ME-●16	Y/V/M/S/B	AM/27/30/40	18 - 32	18/22/32	2 x 4x8	2985 - 5023
4101■■00♦♦ME-●16	Y/V/M/S/B	AM/27/30/40	42	42	2 x 4x16	7631

axtheas | Hanging Lights

axtheas 4102

- Elegant classic hanging lamp
- Clear PMMA glass
- Optics PMMA lenses in multilayer technology
- Housing made of powder-coated aluminum
- Patented cone adapter KG ½ made of stainless steel, with cable gland for bracket mounting
- Mounting adapter ½", ¾" or 1" made of stainless steel more individually optionally available
- Dimensions: ø = 700 | H = 357 [mm]
- Total weight 7.8 kg
- Can be opened without tools
- Power reduction switching phase, ChronoStep, Dali
- Housing color DB703, others on request
- Dielectric strength 10kV

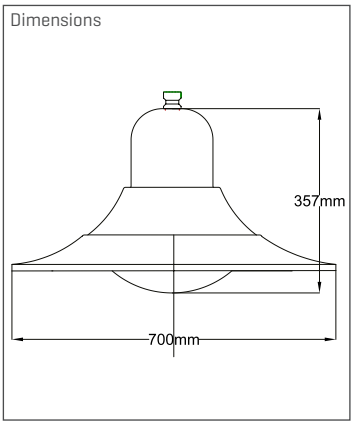

Product number	Lense [●]	Light Color [♦♦]	System performance [W]	System performance typ. [■■W]	LED assembly	System luminous flux [lm]
4102■■00♦♦ME-●AY	S/X/C/B/M/E	27/30/40	7 - 19	07/13/19	1 x 2x4	846 - 2362
4102■■00♦♦ME-●AY	S/X/C/B/M/E	27/30/40	18 - 32	18/22/32	2 x 2x4	2208 - 4175
4102■■00♦♦ME-●AY	S/X/C/B/M/E	27/30/40	42	42	2 x 2x8	5466
4102■■00♦♦ME-●16	Y/V/M/S/B	AM/27/30/40	7 - 19	07/13/19	1 x 4x8	1144 - 3017
4102■■00♦♦ME-●16	Y/V/M/S/B	AM/27/30/40	18 - 32	18/22/32	2 x 4x8	2985 - 5023
4102■■00♦♦ME-●16	Y/V/M/S/B	AM/27/30/40	42	42	2 x 4x16	7631

axtheas 4301

- Elegant, classic pendant lamp in cylinder shape with roof
- Clear PMMA glass
- Optics PMMA lenses in multilayer technology
- Housing made of powder-coated aluminum
- Patented cone adapter KG ½ made of stainless steel, with cable gland for bracket mounting
- Mounting adapter ½", ¾" or 1" made of stainless steel more individually optionally available
- Dimensions: H = 625 | ø = 500 [mm]
- Total weight 8.6kg
- Power reduction switching phase, ChronoStep, Dali
- Housing color DB703

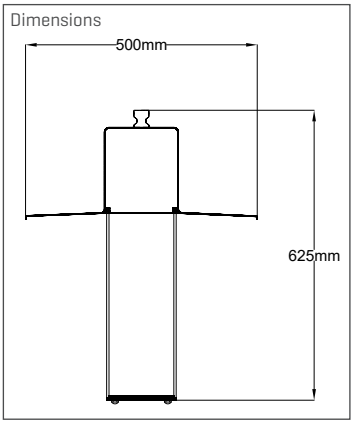

Product number	Lense [●]	Light Color [♦♦]	System performance [W]	System performance typ. [■■W]	LED assembly	System luminous flux [lm]
4301■■00♦♦ME-●AY	S/X/C/B/M/E	27/30/40	7 - 19	07/13/19	1 x 2x4	846 - 2362
4301■■00♦♦ME-●16	Y/V/M/S/B	AM/27/30/40	7 - 19	7/13/19	1 x 4x8	1144 - 3017

axtheas | Hanging Lights

axtheas 4501

- Elegant classic lamp
- Clear PMMA glass
- Optics PMMA lenses in multilayer technology
- Housing made of powder-coated aluminum
- Patented cone adapter KG ½ made of stainless steel, with cable gland for bracket mounting
- Mounting adapter ½", ¾" or 1" made of stainless steel more individually optionally available
- Dimensions: H = 520 | ø = 650 [mm]
- Total weight 8.7 kg
- Degree of protection: IP65, protection class I.
- Power reduction switching phase, ChronoStep, Dali
- Housing color DB703, others on request
- Dielectric strength 10kV

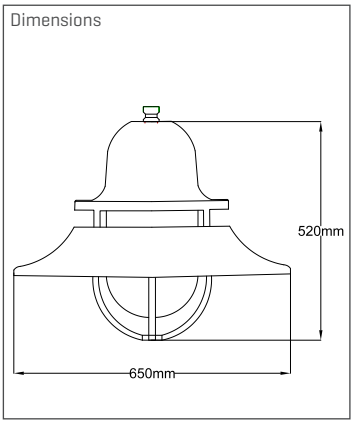

Product number	Lense [●]	Light Color [♦♦]	System performance [W]]	System performance typ. [■■W]	LED assembly	System luminous flux [lm]
4501■■00♦♦ME-●AY	S/X/C/B/M/E	27/30/40	7 - 19	07/13/19	1 x 2x4	846 - 2362
4501■■00♦♦ME-●AY	S/X/C/B/M/E	27/30/40	18 - 32	18/22/32	2 x 2x4	2208 - 4175
4501■■00♦♦ME-●16	Y/V/M/S/B	AM/27/30/40	7 - 19	07/13/19	1 x 4x8	1144 - 3017
4501■■00♦♦ME-●16	Y/V/M/S/B	AM/27/30/40	18 - 32	18/22/32	2 x 4x8	2985 - 5023

axtheas 4201

- Elegant classic hanging lamp
- Clear PMMA glass
- Optics PMMA lenses in multilayer technology
- Housing made of powder-coated aluminum
- Patented cone adapter KG ½ made of stainless steel, with cable gland for bracket mounting
- Mounting adapter ½", ¾" or 1" made of stainless steel more individually optionally available
- Dimensions: ø = 386 | H = 514 [mm]
- Total weight 6.6 kg
- Can be opened without tools
- Power reduction switching phase, ChronoStep, Dali
- Housing color DB703, others on request
- Dielectric strength 10kV

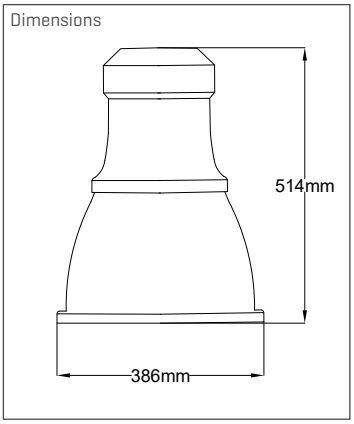

Product number	Lense [●]	Light Color [♦♦]	System performance [W]	System performance typ. [■■W]	LED assembly	System luminous flux [lm]
4201■■00♦♦ME-●AY	S/X/C/B/M/E	27/30/40	7 - 19	07/13/19	1 x 2x4	846 - 2362
4201■■00♦♦ME-●AY	S/X/C/B/M/E	27/30/40	18 - 32	18/22/32	2 x 2x4	2208 - 4175
4201■■00♦♦ME-●16	Y/V/M/S/B	AM/27/30/40	7 - 19	7/13/19	1 x 4x8	1144 - 3017
4201■■00♦♦ME-●16	Y/V/M/S/B	AM/27/30/40	18 - 32	18/22/32	2 x 4x8	2985 - 5023

axtheas | Hanging Lights

axtheas 4202

- Elegant classic hanging lamp
- Clear PMMA glass
- Optics PMMA lenses in multilayer technology
- Housing made of powder-coated aluminum
- Patented cone adapter KG ½ made of stainless steel, with cable gland for bracket mounting
- Mounting adapter ½", ¾" or 1" made of stainless steel more individually optionally available
- Dimensions: H = 465 | ø = 490 [mm]
- Total weight 8.9 kg
- Can be opened without tools
- Power reduction switching phase, ChronoStep, Dali
- Housing color DB703, others on request
- Dielectric strength 10kV

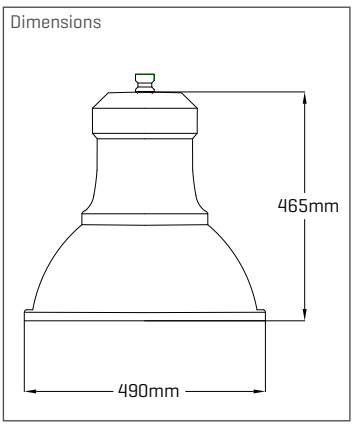

Product number	Lense [●]	Light Color [♦♦]	System performance [W]	System performance typ. [■■W]	LED assembly	System luminous flux [lm]
4202■■00♦♦ME-●AY	S/X/C/B/M/E	27/30/40	7 - 19	07/13/19	1 x 2x4	846 - 2362
4202■■00♦♦ME-●AY	S/X/C/B/M/E	27/30/40	18 - 32	18/22/32	2 x 2x4	2208 - 4175
4202■■00♦♦ME-●AY	S/X/C/B/M/E	27/30/40	42 - 62	42/52/62	2 x 2x8	5466 - 8277
4202■■00♦♦ME-●16	Y/V/M/S/B	AM/27/30/40	7 - 19	07/13/19	1 x 4x8	1144 - 3017
4202■■00♦♦ME-●16	Y/V/M/S/B	AM/27/30/40	18 - 32	18/22/32	2 x 4x8	2985 - 5023
4202■■00♦♦ME-●16	Y/V/M/S/B	AM/27/30/40	42 - 62	42/52/62	2 x 4x16	7631 - 10650

axtheas 4203

- Elegant classic hanging lamp
- Clear PMMA glass
- Optics PMMA lenses in multilayer technology
- Housing made of powder-coated aluminum
- Patented cone adapter KG ½ made of stainless steel, with cable gland for bracket mounting
- Mounting adapter ½", ¾" or 1" made of stainless steel more individually optionally available
- Dimensions: H = 573 | ø = 570 [mm]
- Total weight 10.2 kg
- Can be opened without tools
- Power reduction switching phase, ChronoStep, Dali
- Housing color DB703, others on request
- Dielectric strength 10kV

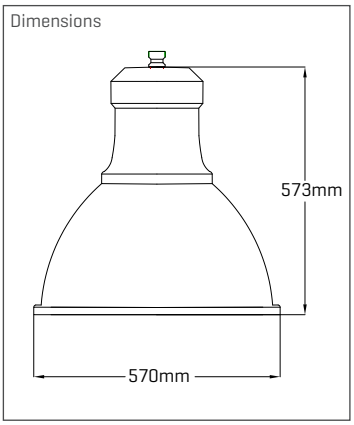

Product number	Lense [●]	Light Color [♦♦]	System performance [W]	System performance typ. [■■W]	LED assembly	System luminous flux [lm]
4203■■00♦♦ME-●AY	S/X/C/B/M/E	27/30/40	18 - 32	18/22/32	2 x 2x4	2208 - 4175
4203■■00♦♦ME-●AY	S/X/C/B/M/E	27/30/40	42 - 62	42/52/62	2 x 2x8	5466 - 8277
4203■■00♦♦ME-●16	Y/V/M/S/B	AM/27/30/40	18 - 32	18/22/32	2 x 4x8	2985 - 5023
4203■■00♦♦ME-●16	Y/V/M/S/B	AM/27/30/40	42 - 62	42/52/62	2 x 4x16	7631 - 10650

axtheas | Hanging Lights

axtheas 4701

- Simple classic hanging lamp
- Clear PMMA glass
- Optics PMMA lenses in multilayer technology
- Housing made of powder-coated aluminum
- Patented cone adapter KG ½ made of stainless steel, with cable gland for bracket mounting
- Mounting adapter ½", ¾" or 1" made of stainless steel more individually optionally available
- Dimensions: H = 218 | ø = 505 [mm]
- Total weight 7.9 kg
- Can be opened without tools
- Power reduction switching phase ChronoStep, Dali
- Housing color RAL9005, others on request
- Dielectric strength 10kV

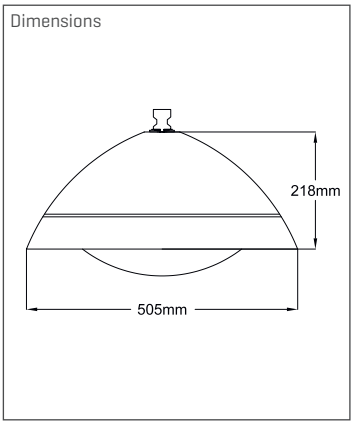

Product number	Lense [●]	Light Color [♦♦]	System performance [W]	System performance typ. [■■W]	LED assembly	System luminous flux [lm]
4701■■00♦♦ME-●AY	S/X/C/B/M/E	27/30/40	18 - 32	18/22/32	2 x 2x4	2208 - 4175
4701■■00♦♦ME-●AY	S/X/C/B/M/E	27/30/40	42 - 62	42/52/62	2 x 2x8	5466 - 8277
4701■■00♦♦ME-●16	Y/V/M/S/B	AM/27/30/40	18 - 32	18/22/32	2 x 4x8	2985 - 5023
4701■■00♦♦ME-●16	Y/V/M/S/B	AM/27/30/40	42 - 62	42/52/62	2 x 4x16	7631 - 10650

axtheas 4801

- Elegant classic hanging lamp
- Clear PMMA glass
- Optics PMMA lenses in multilayer technology
- Housing made of powder-coated aluminum
- Patented cone adapter made of stainless steel,
- with cable gland for bracket mounting
- Mounting adapter ½", ¾" or 1" made of stainless steel
- more individually optionally available
- Dimensions: ø = 386 | H = 577 [mm]
- Total weight 6.6 kg
- Can be opened without tools
- Power reduction switching phase, ChronoStep, Dali
- Housing color DB703, others on request
- Dielectric strength 10kV

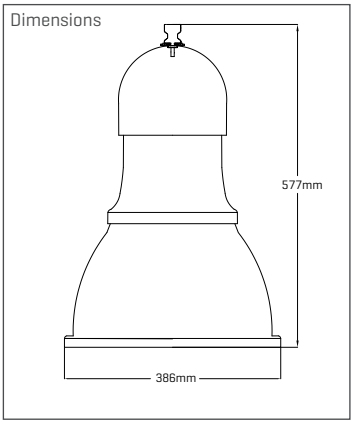

Product number	Lense [●]	Light Color [♦♦]	v	System performance typ. [■■W]	LED assembly	System luminous flux [lm]
4801■■00♦♦ME-●AY	S/X/C/B/M/E	27/30/40	7 - 19	07/13/19	1 x 2x4	846 - 2362
4801■■00♦♦ME-●AY	S/X/C/B/M/E	27/30/40	18 - 32	18/22/32	2 x 2x4	2208 - 4175
4801■■00♦♦ME-●16	Y/V/M/S/B	AM/27/30/40	7 - 19	7/13/19	1 x 4x8	1144 - 3017
4801■■00♦♦ME-●16	Y/V/M/S/B	AM/27/30/40	18 - 32	18/22/32	2 x 4x8	2985 - 5023

axtheas | Hanging Lights

axtheas 4901

- Elegant classic pendant lamp
- Clear PMMA luminaire glass
- Optics PMMA lenses in multilayer technology
- Housing made of powder-coated aluminum
- Patented cone adapter made of stainless steel, with cable gland for bracket mounting
- Mounting adapter ½", ¾" or 1" made of stainless steel more individually optionally available
- Dimensions: ø = 495 | H = 620 [mm]
- Total weight 7.2 kg
- Can be opened without tools
- Power reduction switching phase, ChronoStep, Dali
- Housing color DB703, others on request
- Dielectric strength 10kV

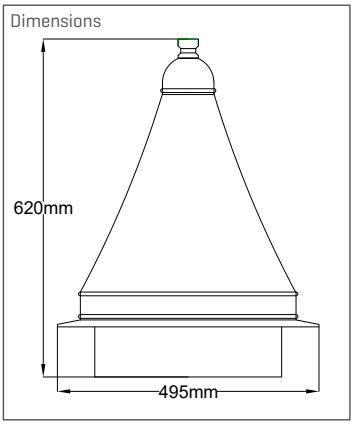

Product number	Lense [●]	Light Color [♦♦]	System performance [W]	System performance typ. [■■W]	LED assembly	System luminous flux [lm]
4901■■00♦♦ME-●AY	S/X/C/B/M/E	27/30/40	7 - 19	07/13/19	1 x 2x4	846 - 2362
4901■■00♦♦ME-●AY	S/X/C/B/M/E	27/30/40	18 - 32	18/22/32	2 x 2x4	2208 - 4175
4901■■00♦♦ME-●16	Y/V/M/S/B	AM/27/30/40	7 - 19	7/13/19	1 x 4x8	1144 - 3017
4901■■00♦♦ME-●16	Y/V/M/S/B	AM/27/30/40	18 - 32	18/22/32	2 x 4x8	2985 - 5023

axerna | Stele Lights

axerna 5001

- Simple classic light stele
- Luminaire glass PMMA clear or satined
- Optics PMMA lenses in multilayer technology
- Housing made of powder-coated aluminum with bottom flange
- Dimensions: H = max. 3500 (selectable) | ø = 170 (mm)
- Power reduction switching phase ChronoStep, Dali
- Housing color RAL9005, others on request
- Dielectric strength 10kV

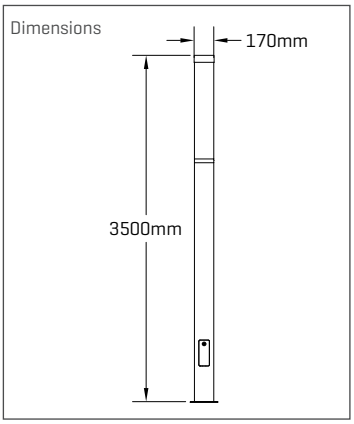

Product number	Lense (●)	Light Color (♦♦)	System performance (W)	System performance typ. (■■W)	LED assembly	System luminous flux (lm)
5001■■00♦♦ME-●AY	S/X/C/B/M/E	27/30/40	7 - 19	07/13/19	1 x 2x4	846 - 2362
5001■■00♦♦ME-●AY	S/X/C/B/M/E	27/30/40	18 - 32	18/22/32	2 x 2x4	2208 - 4175
5001■■00♦♦ME-●16	Y/V/M/S/B	AM/27/30/40	7 - 19	07/13/19	1 x 4x8	1144 - 3017
5001■■00♦♦ME-●16	Y/V/M/S/B	AM/27/30/40	18 - 32	18/22/32	2 x 4x8	2985 - 5023

axerna 5002

- Simple classic light stele
- Luminaire glass PMMA clear or satined
- Optics PMMA lenses in multilayer technology
- Housing made of powder-coated aluminum with bottom flange
- Dimensions: H = max. 3500 (selectable) | ø = 170 (mm)
- Power reduction switching phase ChronoStep, Dali
- Housing color RAL9005, others on request
- Dielectric strength 10kV

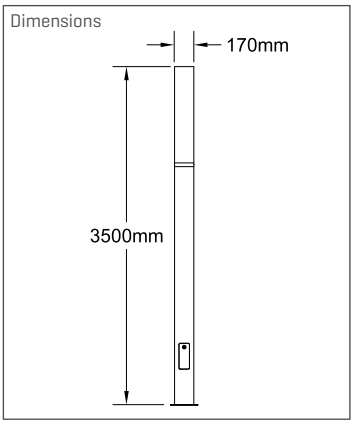

Product number	Lense (●)	Light Color (♦♦)	System performance (W)	System performance typ. (■■W)	LED assembly	System luminous flux (lm)
5002■■00♦♦ME-●AY	S/X/C/B/M/E	27/30/40	7 - 19	07/13/19	1 x 2x4	846 - 2362
5002■■00♦♦ME-●AY	S/X/C/B/M/E	27/30/40	18 - 32	18/22/32	2 x 2x4	2208 - 4175
5002■■00♦♦ME-●16	Y/V/M/S/B	AM/27/30/40	7 - 19	07/13/19	1 x 4x8	1144 - 3017
5002■■00♦♦ME-●16	Y/V/M/S/B	AM/27/30/40	18 - 32	18/22/32	2 x 4x8	2985 - 5023

axerna | Stele Lights

axerna 5003

- Simple classic light column with Fan reflector insert
- Luminaire glass PMMA clear or satined
- Optics PMMA lenses in multilayer technology
- Housing made of powder-coated aluminum with base flange
- Dimensions: H = max. 3500 (selectable) | ø = 170 (mm)
- Power reduction switching phase ChronoStep, Dali
- Housing color RAL9005, others on request
- Dielectric strength 10kV

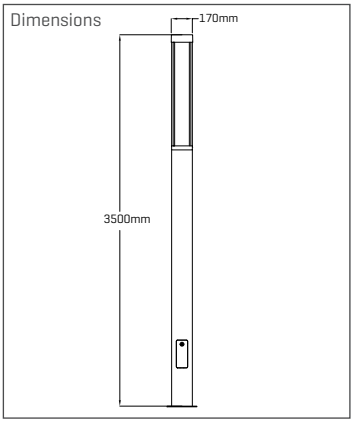

Product number	Lense [●]	Light Color [♦♦]	System performance [W]	System performance typ. [■■W]	LED assembly	System luminous flux [lm]
5003■■00♦♦ME-●AY	S/X/C/B/M/E	27/30/40	7 - 19	07/13/19	1 x 2x4	846 - 2362
5003■■00♦♦ME-●AY	S/X/C/B/M/E	27/30/40	18 - 32	18/22/32	2 x 2x4	2208 - 4175
5003■■00♦♦ME-●16	Y/V/M/S/B	AM/27/30/40	7 - 19	07/13/19	1 x 4x8	1144 - 3017
5003■■00♦♦ME-●16	Y/V/M/S/B	AM/27/30/40	18 - 32	18/22/32	2 x 4x8	2985 - 5023

axerna 5004

- Simple classic light stele with wooden or powder-coated aluminum mast
- Luminaire glass PMMA clear or satined
- Optics PMMA lenses in multilayer technology
- Housing made of powder-coated aluminum with base flange
- Dimensions: H = max. 3500 (selectable) | ø = 440 (mm)
- Power reduction switching phase ChronoStep, Dali
- Housing color RAL7021, others on request
- Dielectric strength 10kV V

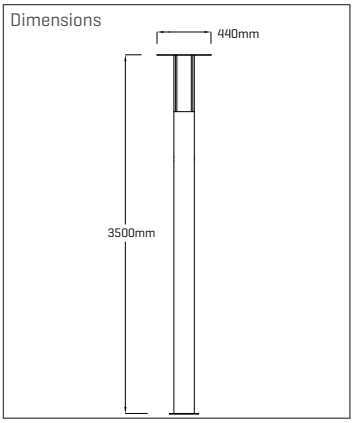

Product number	Lense [●]	Light Color [♦♦]	System performance [W]	System performance typ. [■■W]	LED assembly	System luminous flux [lm]
5004■■00♦♦ME-●AY	S/X/C/B/M/E	27/30/40	7 - 19	07/13/19	1 x 2x4	846 - 2362
5004■■00♦♦ME-●16	Y/V/M/S/B	AM/27/30/40	7 - 19	07/13/19	1 x 4x8	1144 - 3017

axerna | Stele Lights

axerna 5005

- Simple classic light stele with wooden or powder-coated aluminum mast
- Luminaire glass PMMA clear or satined
- Optics PMMA lenses in multilayer technology
- Housing made of powder-coated aluminum
- with bottom flange
- Dimensions: H = max. 3500 (selectable) | ø = 180 (mm)
- Power reduction switching phase ChronoStep, Dali
- Luminaire glass PMMA clear or satined
- Optics PMMA lenses in multilayer technology
- Dimensions: H = max. 3500 (selectable) | ø = 150 (mm)
- Power reduction switching phase ChronoStep, Dali
- Housing color RAL7021, others on request

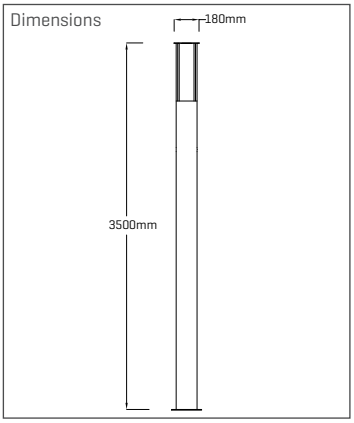

Product number	Lense (●)	Light Color (♦♦)	System performance (W)	System performance typ. (■■W)	LED assembly	System luminous flux (lm)
5005■■00♦♦ME-●AY	S/X/C/B/M/E	27/30/40	7 - 19	07/13/19	1 x 2x4	846 - 2362
5005■■00♦♦ME-●16	Y/V/M/S/B	AM/27/30/40	7 - 19	07/13/19	1 x 4x8	1144 - 3017

axior | Bollard Lights

axior 6001

- Bollard lights in elegant round and timeless classic design
- Housing made of powder-coated aluminum
- Luminaire glass made of UV-resistant PMMA
- Floor flange with cable entry
- Fan reflector
- Optional hot-dip galvanized earth section
- Housing color RAL9005, others on request
- Dimensions: H = 1000 | ø = 168 [mm]

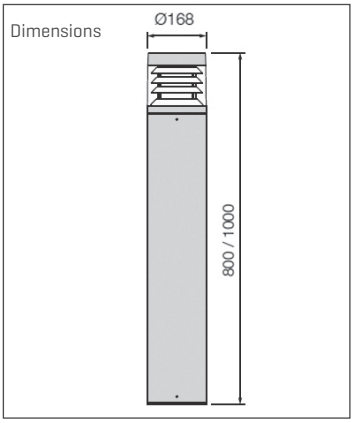

Product number	Lense [●]	Light Color [♦♦]	System performance [W]	System performance typ. [■■W]	LED assembly	System luminous flux [lm]
60011200♦♦BA-SY	Fächerreflektor	30/40	12	12	144 SMD LED	847
60011700♦♦BA-SY	Fächerreflektor	30/40	17	17	144 SMD LED	1233
60012500♦♦BA-SY	Fächerreflektor	30/40	25	25	144 SMD LED	1850

axior 6002

- Bollard lights in an elegant, round and timeless classic design
- Housing made of powder-coated aluminum
- Luminaire glass made of UV-resistant PMMA
- Floor flange with cable entry
- Trumpet reflector
- Optional hot-dip galvanized earth section
- Housing color RAL9005, others on request
- Dimensions: H = 1000 | ø = 168 [mm]

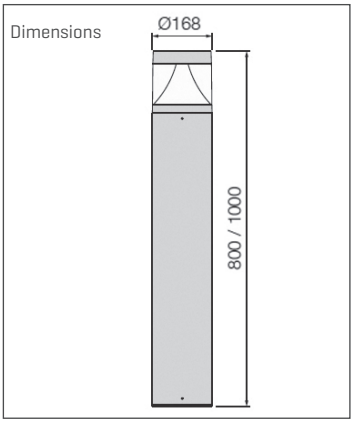

Product number	Lense [●]	Light Color [♦♦]	System performance [W]	System performance typ. [■■W]	LED assembly	System luminous flux [lm]
60021200♦♦BA-SY	Trompetenreflektor	30/40	12	12	132 SMD LED	756
60021700♦♦BA-SY	Trompetenreflektor	30/40	17	17	132 SMD LED	1099
60022500♦♦BA-SY	Trompetenreflektor	30/40	25	25	132 SMD LED	1650

axior | Bollard Lights

axior 6003

- Bollard lights in an elegant, round and timeless classic design
- Housing made of powder-coated aluminum
- Luminaire glass made of UV-resistant PMMA
- Floor flange with cable entry
- satined inner cylinder
- Optional hot-dip galvanized earth section
- Housing color RAL9005, others on request
- Dimensions: H = 1000 | ø = 168 [mm]

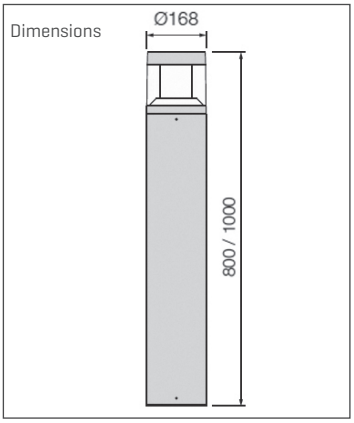

Product number	Lense [●]	Light Color [♦♦]	System performance [W]	System performance typ. [■■W]	LED assembly	System luminous flux [lm]
60031200♦♦BA-SY	ohne	30/40	12	12	144 SMD LED	1031
60031700♦♦BA-SY	ohne	30/40	17	17	144 SMD LED	1499
60032500♦♦BA-SY	ohne	30/40	25	25	144 SMD LED	2250

axior 6004

- Bollard lights in an elegant, round and timeless classic design
- Housing made of powder-coated aluminum
- Luminaire glass made of UV-resistant PMMA
- Floor flange with cable entry
- Fan reflector
- Optional hot-dip galvanized earth section
- Housing color RAL9005, others on request
- Dimensions: H = 1000 | ø = 170 [mm]

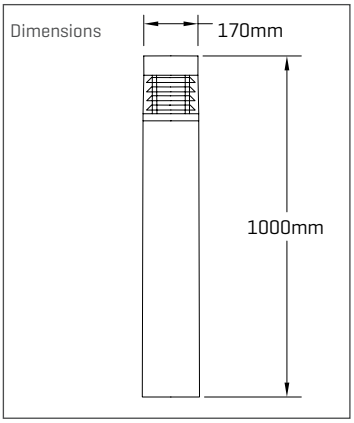

Product number	Lense [●]	Light Color [♦♦]	System performance [W]	System performance typ. [■■W]	LED assembly	System luminous flux [lm]
60041200♦♦BA-SY	Fächerreflektor	30/40	12	12	144 SMD LED	847
60041700♦♦BA-SY	Fächerreflektor	30/40	17	17	144 SMD LED	1233
60042500♦♦BA-SY	Fächerreflektor	30/40	25	25	144 SMD LED	1850

axior | Bollard Lights

axior 6006

- Bollard lights in an elegant, round and timeless classic design
- Housing made of powder-coated aluminum
- Luminaire glass made of UV-resistant PMMA
- Floor flange with cable entry
- satined inner cylinder with rods
- Optional hot-dip galvanized earth section
- Housing color RAL9005, others on request
- Dimensions: H = 1000 | ø = 170 [mm]

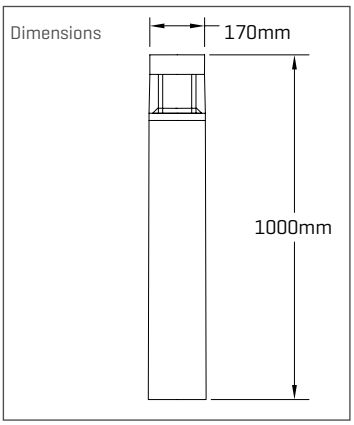

Product number	Lense [●]	Light Color [♦♦]	System performance [W]	System performance typ. [■■W]	LED assembly	System luminous flux [lm]
60062500♦♦BA-SY	ohne	30/40	12	12	144 SMD LED	1031
60061700♦♦BA-SY	ohne	30/40	17	17	144 SMD LED	1499
60062500♦♦BA-SY	ohne	30/40	25	25	144 SMD LED	2250

axior 6101

- Bollard lights in an elegant, round and timeless classic design
- Housing made of powder-coated aluminum
- Luminaire glass made of UV-resistant PMMA
- Floor flange with cable entry
- Fan reflector
- Optional hot-dip galvanized earth section
- Housing color RAL9005, others on request
- Dimensions: H = 1000 | ø = 168 [mm]

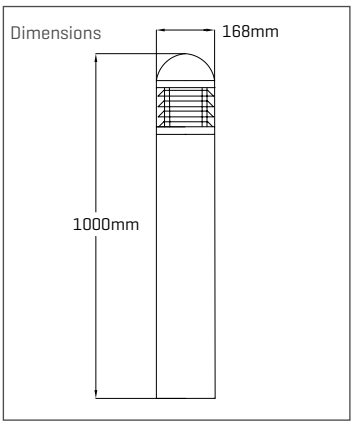

Product number	Lense [●]	Light Color [♦♦]	System performance [W]	System performance typ. [■■W]	LED assembly	System luminous flux [lm]
61011200♦♦BA-SY	Fächerreflektor	30/40	12	12	144 SMD LED	847
61011700♦♦BA-SY	Fächerreflektor	30/40	17	17	144 SMD LED	1233
61012500♦♦BA-SY	Fächerreflektor	30/40	25	25	144 SMD LED	1850

axior | Bollard Lights

axior 6102

- Bollard lights in an elegant, round and timeless classic design
- Housing made of powder-coated aluminum
- Luminaire glass made of UV-resistant PMMA
- Floor flange with cable entry
- Trumpet reflector
- Optional hot-dip galvanized earth section
- Housing color RAL9005, others on request
- Dimensions: H = 1000 | ø = 168 [mm]

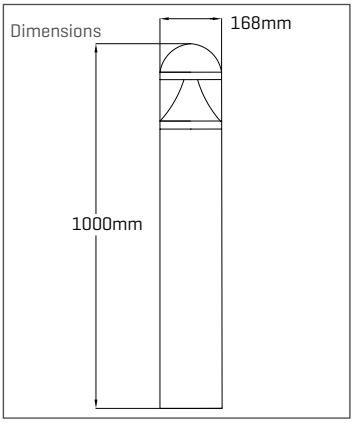

Product number	Lense [●]	Light Color [♦♦]	System performance [W]	System performance typ. [■■W]	LED assembly	System luminous flux [lm]
61021200♦♦BA-SY	Trompetenreflektor	30/40	12	12	132 SMD LED	756
61021700♦♦BA-SY	Trompetenreflektor	30/40	17	17	132 SMD LED	1099
61022500♦♦BA-SY	Trompetenreflektor	30/40	25	25	132 SMD LED	1650

axior 6103

- Bollard lights in an elegant, round and timeless classic design
- Housing made of powder-coated aluminum
- Luminaire glass made of UV-resistant PMMA
- Floor flange with cable entry
- satined inner cylinder
- Optional hot-dip galvanized earth section
- Housing color RAL9005, others on request
- Dimensions: H = 1000 | ø = 168 [mm]

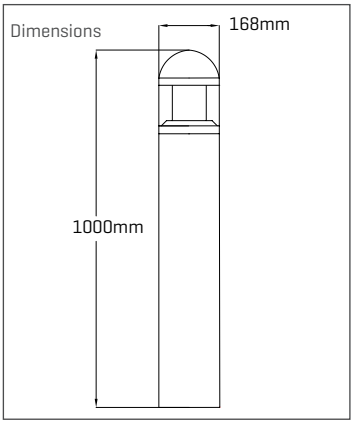

Product number	Lense [●]	Light Color [♦♦]	System performance [W]	System performance typ. [■■W]	LED assembly	System luminous flux [lm]
61031200♦♦BA-SY	ohne	30/40	12	12	144 SMD LED	1031
61031700♦♦BA-SY	ohne	30/40	17	17	144 SMD LED	1499
61032500♦♦BA-SY	ohne	30/40	25	25	144 SMD LED	2250

axior | Bollard Lights

axior 6202S

- Bollard lights in elegant square and timeless classic design
- Housing made of powder-coated aluminum
- Luminaire glass made of UV-resistant PMMA
- Floor flange with cable entry
- Trumpet reflector
- Optional hot-dip galvanized earth section
- Housing color RAL9005, others on request
- Dimensions: H = 800 | B = 120 | T = 120 (mm)

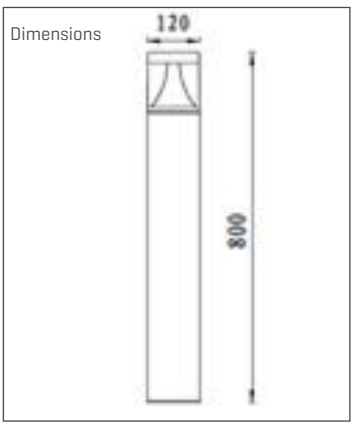

Product number	Lense (●)	Light Color (♦♦)	System performance (W)	System performance typ. (■■W)	LED assembly	System luminous flux (lm)
6202S1500♦♦BA-SY	ohne	30/40	15	15	132 SMD LED	990

axior 6202

- Bollard lights in an elegant, square and timeless classic design
- Housing made of powder-coated aluminum
- Luminaire glass made of UV-resistant PMMA
- Floor flange with cable entry
- Trumpet reflector
- Optional hot-dip galvanized earth section
- Housing color RAL9005, others on request
- Dimensions: H = 1000 | B = 178 | T = 178 (mm)

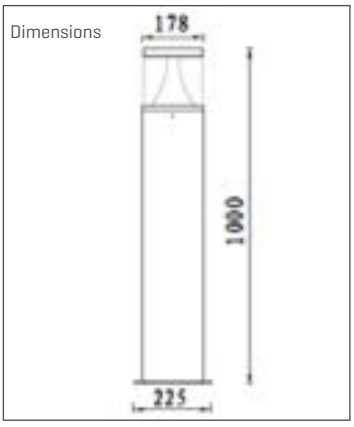

Product number	Lense (●)	Light Color (♦♦)	System performance (W)	System performance typ. (■■W)	LED assembly	System luminous flux (lm)
62022500♦♦BA-SY	ohne	30/40	25	25	168 SMD LED	1650

axior | Bollard Lights

axior 6608

- Bollard lights with swiveling head
- Housing made of powder-coated aluminum
- Luminaire glass made of UV-resistant PMMA
- Floor flange with cable entry
- Optional hot-dip galvanized earth section
- Housing color RAL7012, others on request
- Dimensions: H = 800 | B = 195 | T = 90 [mm]

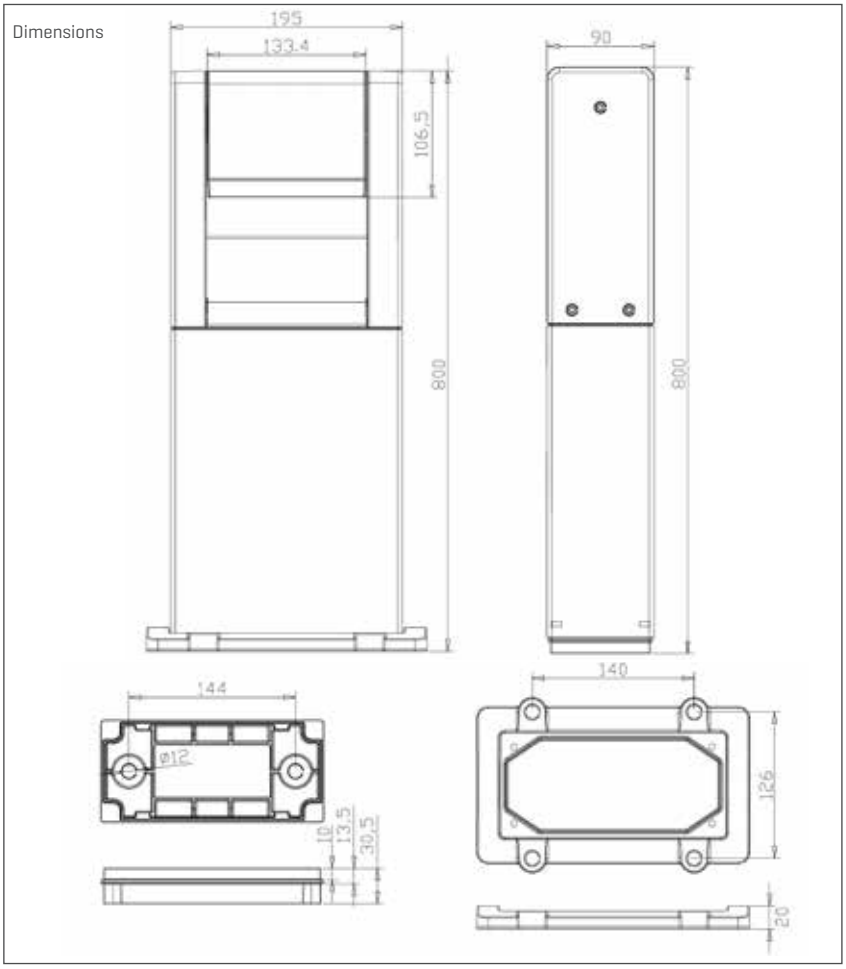

Product number	Lense [●]	Light Color [♦♦]	System performance [W]	System performance typ. [■■W]	LED assembly	System luminous flux [lm]
66080900♦♦BA-SY	ohne	30/40	9	9	SMD	1155

axior | Wall and Ceiling Outdoor Lights

axior 6407

- Wall lamp
- Light emission above and below
- rotationally symmetrical light distribution
- stable aluminum housing powder-coated
- Luminaire glass made of ESG glass
- Wall mounting flange
- Housing color RAL9005, others on request
- Dimensions 25Watt variant: H = 350 | ø = 120 [mm]
  Dimensions 35Watt variant: H = 430 | ø = 154 [mm]
  Dimensions 48Watt variant: H = 450 | ø = 200 [mm]

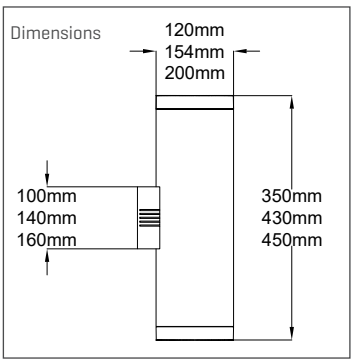

Product number	Lense [●]	Light Color [♦♦]	System performance [W]	System performance typ. [■■W]	LED assembly	System luminous flux [lm]
64072000♦♦BA-SY●	12°/25°	30/40	25	25	COB	2375lm
64073000♦♦BA-SY●	12°/25°	30/40	35	35	COB	3325lm
64074000♦♦BA-SY●	12°/25°	30/40	48	48	COB	4560lm

axior | Wall and Ceiling Outdoor Lights

axior 6800

- Wall lamp
- Light emission above and below
- rotationally symmetrical light distribution
- stable aluminum housing powder-coated
- Luminaire glass made of ESG glass
- Wall mounting flange
- Housing color RAL9005, others on request
- Dimensions: H = 400 | ø = 200 [mm]

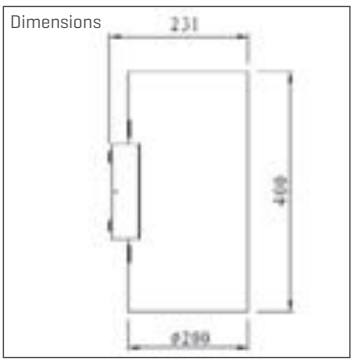

Product number	Lense [●]	Light Color [♦♦]	System performance [W]	System performance typ. [■■W]	LED assembly	System luminous flux [lm]
68008000♦♦BA-SY	ohne	30/40	80	80	COB	7600

axior 6801

- Ceiling lamp
- Light exit below
- rotationally symmetrical light distribution
- stable aluminum housing powder-coated
- Luminaire glass made of ESG glass
- Ceiling mounting flange
- Housing color RAL9005, others on request
- Dimensions: H = 138 | ø = 126 [mm]

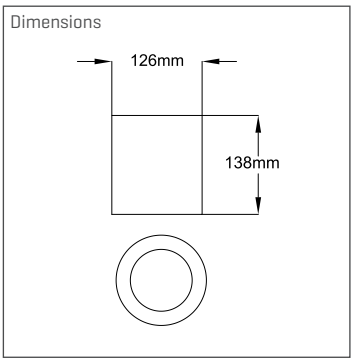

Product number	Lense [●]	Light Color [♦♦]	System performance [W]	System performance typ. [■■W]	LED assembly	System luminous flux [lm]
68011200♦♦BA-SY	ohne	30/40	12	12	COB	1140

axior 6802

- Ceiling lamp
- Light exit below
- rotationally symmetrical light distribution
- stable aluminum housing powder-coated
- Luminaire glass made of ESG glass
- Ceiling mounting flange
- Housing color RAL9005, others on request
- Dimensions: H = 150 | ø = 166 [mm]

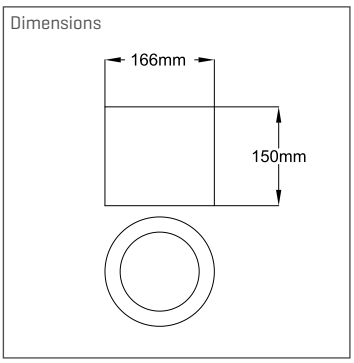

Product number	Lense [●]	Light Color [♦♦]	System performance [W]	System performance typ. [■■W]	LED assembly	System luminous flux [lm]
68024000♦♦BA-SY	ohne	30/40	40	40	COB	3800

axior | Wall and Ceiling Outdoor Lights

axior 6418

- Wall-mounted luminaire
- Stable aluminum housing, powder-coated
- Luminaire glass made of UV-resistant, impact-resistant PMMA
- Wall mounting flange
- Housing color RAL7012, others on request
- Dimension H = 262 | B = 303 | T = 148 (mm)

Dimensions

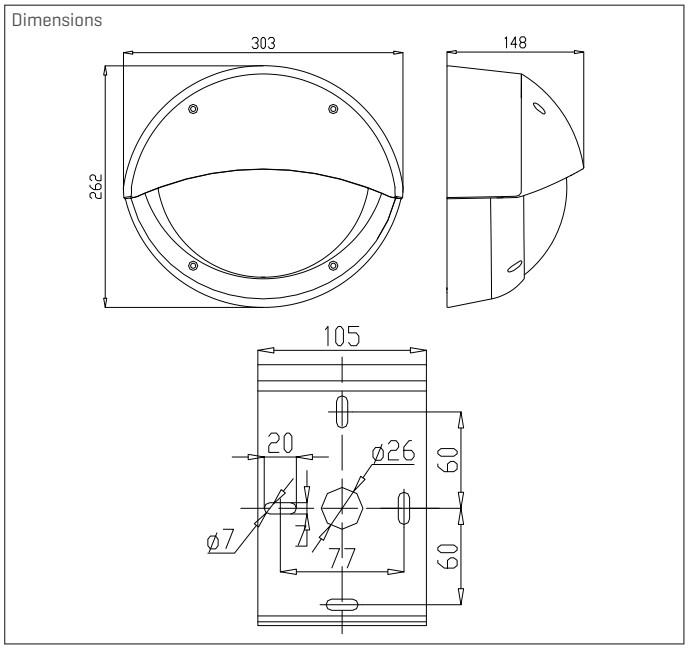

Product number	Lense [●]	Light Color [♦♦]	System performance [W]	System performance typ. [■■W]	LED assembly	System luminous flux [lm]
64181400♦♦BA-SY	ohne	27/30/40	14	14	COB	1330
64182000♦♦BA-SY	ohne	27/30/40	20	20	COB	1900

axior 6420

- Wall-mounted luminaire
- Stable aluminum housing, powder-coated
- Luminaire glass made of UV-resistant, impact-resistant PMMA
- Wall mounting flange
- Housing color RAL7012, others on request
- Dimension H = 230 | B = 270 | T = 130 (mm)

Dimensions

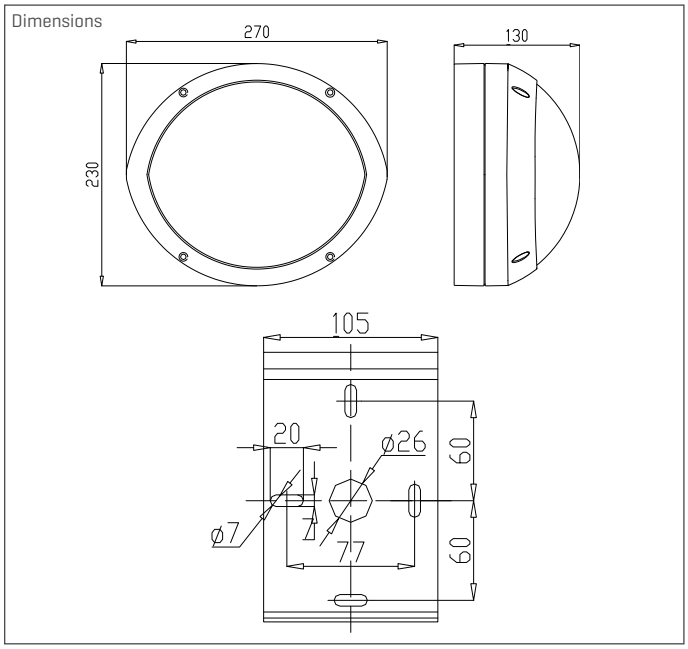

Product number	Lense [●]	Light Color [♦♦]	System performance [W]	System performance typ. [■■W]	LED assembly	System luminous flux [lm]
64201400♦♦BA-SY	ohne	27/30/40	14	14	COB	1330
64202000♦♦BA-SY	ohne	27/30/40	20	20	COB	1900

axior | Wall and Ceiling Outdoor Lights

axior 6421

- Wall-mounted luminaire
- Stable aluminum housing, powder-coated
- Luminaire glass made of UV-resistant, impact-resistant PMMA
- Wall mounting flange
- Housing color RAL7012, others on request
- Dimensions: H = 230 | B = 270 | T = 137 (mm)

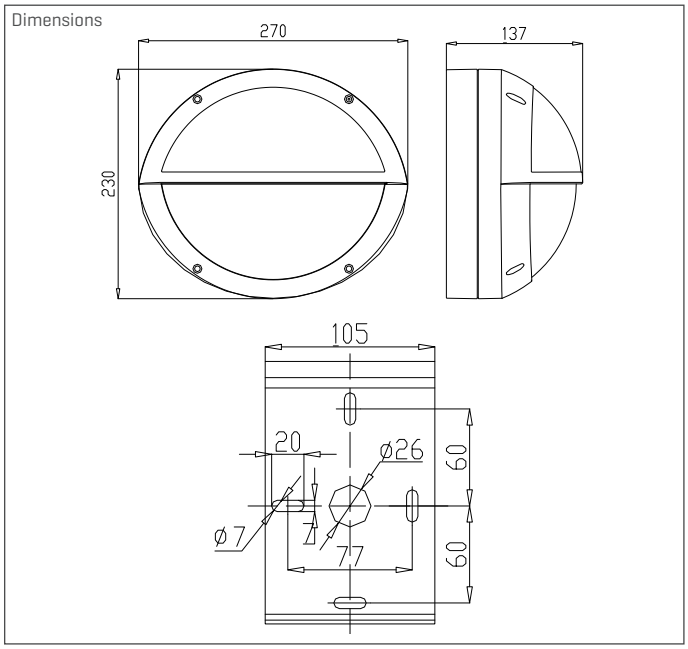

Product number	Lense [●]	Light Color [♦♦]	System performance [W]	System performance typ. [■■W]	LED assembly	System luminous flux [lm]
64211400♦♦BA-SY	ohne	27/30/40	14	14	COB	1330
64212000♦♦BA-SY	ohne	27/30/40	20	20	COB	1900

axior 6422

- Wall-mounted luminaire
- Stable aluminum housing, powder-coated
- Luminaire glass made of UV-resistant, impact-resistant PMMA
- Wall mounting flange
- Housing color RAL7012, others on request
- Dimension H = 230 | B = 270 | T = 139 (mm)

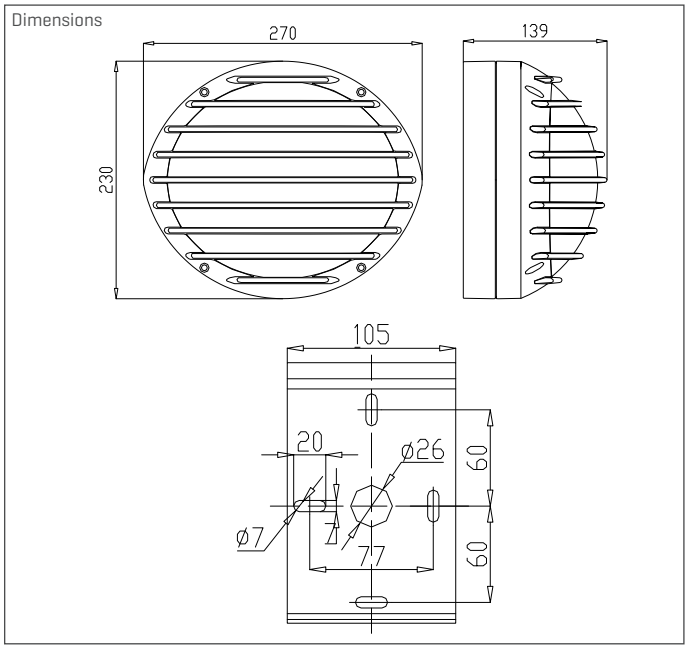

Product number	Lense [●]	Light Color [♦♦]	System performance [W]	System performance typ. [■■W]	LED assembly	System luminous flux [lm]
64221400♦♦BA-SY	ohne	27/30/40	14	14	COB	1330
64222000♦♦BA-SY	ohne	27/30/40	20	20	COB	1900

axior | Wall and Ceiling Outdoor Lights

axior 6423

- Wall-mounted luminaire
- Stable aluminum housing, powder-coated
- Luminaire glass made of UV-resistant, impact-resistant PMMA
- Wall mounting flange
- Housing color RAL7012, others on request
- Dimension H = 230 | B = 270 | T = 134 (mm)

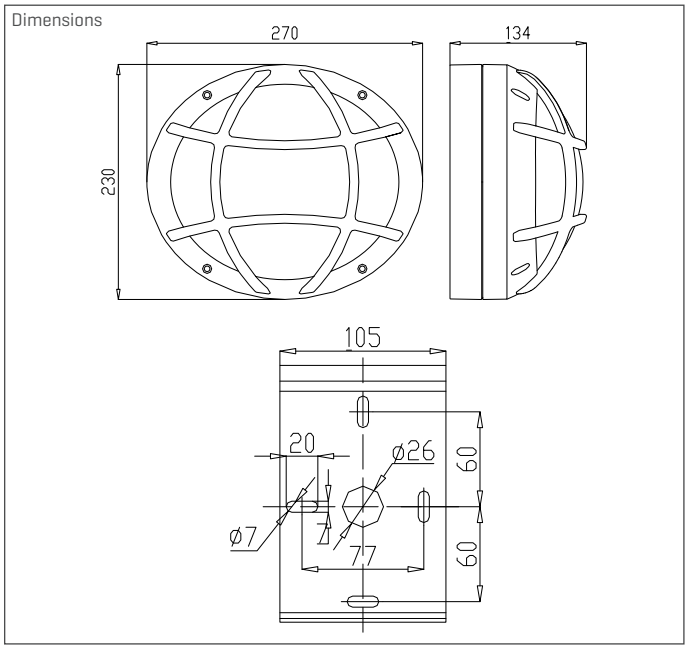

Product number	Lense [●]	Light Color [♦♦]	System performance [W]	System performance typ. [■■W]	LED assembly	System luminous flux [lm]
64231400♦♦BA-SY	ohne	27/30/40	14	14	COB	1330
64232000♦♦BA-SY	ohne	27/30/40	20	20	COB	1900

axior 6900

- Wall-mounted luminaire
- Stable aluminum housing, powder-coated
- Luminaire glass made of ESG glass
- Beam direction up and down
- Wall mounting flange
- Housing color RAL9022, others on request
- Dimensions: H = 90 | B = 220 | T = 120 (mm)

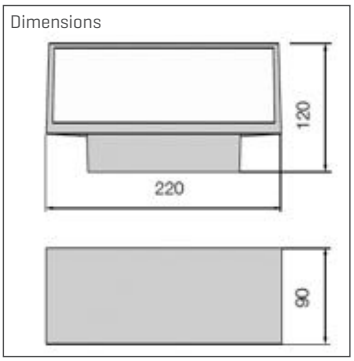

Product number	Lense [●]	Light Color [♦♦]	System performance [W]	System performance typ. [■■W]	LED assembly	System luminous flux [lm]
69000900♦♦BA-SY	ohne	30/40	9	09	SMD-LED	650

axior | Wall and Ceiling Outdoor Lights

axior 6901

- Wall-mounted luminaire
- Stable aluminum housing, powder-coated
- Luminaire glass made of ESG glass
- Beam direction up and down
- Wall mounting flange
- Housing color RAL9022, others on request
- Dimensions: H = 70 | B = 160 | T = 90 (mm)

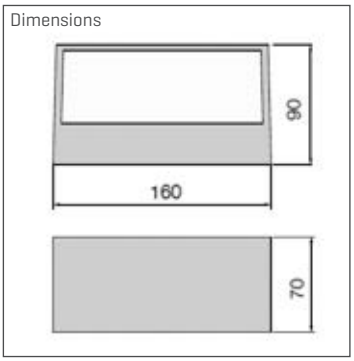

Product number	Lense (●)	Light Color (♦♦)	System performance (W)	System performance typ. (■■W)	LED assembly	System luminous flux (lm)
69010900♦♦BA-SY	ohne	30/40	9	09	SMD-LED	520

axior 6902

- Wall-mounted luminaire
- Stable aluminum housing, powder-coated
- Luminaire glass made of ESG glass
- Beam direction up and down
- Wall mounting flange
- Housing color RAL9022, others on request
- Dimensions: H = 90 | B = 220 | T = 106 (mm)

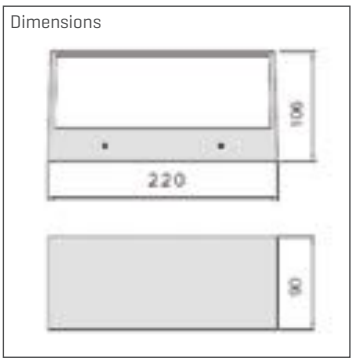

Product number	Lense (●)	Light Color (♦♦)	System performance (W)	System performance typ. (■■W)	LED assembly	System luminous flux (lm)
69021500♦♦BA-SY	ohne	30/40	15	15	SMD-LED	300

axior 6903

- Round wall-mounted luminaire
- Stable aluminum housing, powder-coated
- Luminaire glass made of ESG glass
- Beam direction up and down
- Wall mounting flange
- Housing color RAL9005, others on request
- Dimensions: H = 120 | B = 250 | T = 130 (mm)

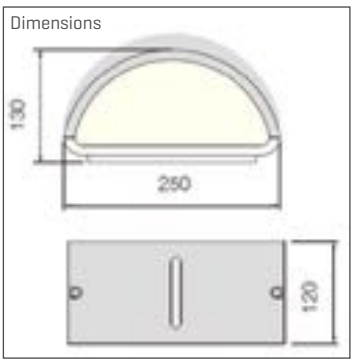

Product number	Lense (●)	Light Color (♦♦)	System performance (W)	System performance typ. (■■W)	LED assembly	System luminous flux (lm)
69030800♦♦BA-SY	ohne	30/40	12	12	COB	290

axior | Wall and Ceiling Outdoor Lights

axior 6906

- LED wall light up / down
- Multifunctional use
- Use at low to medium mounting heights
- timeless design
- Wall mounting flange
- Housing color RAL9005, others on request
- Dimensions: H = 170 | B = 140 | T = 168 (mm)

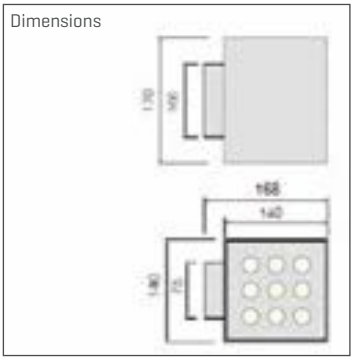

Product number	Lense (●)	Light Color (♦♦)	System performance (W)	System performance typ. (■■W)	LED assembly	System luminous flux (lm)
69063600♦♦BA-SY	up/down	30/40	36	36	SMD-LED	2720

axior 6907

- Compact LED wall light
- Multifunctional use
- Use at low to medium mounting heights
- timeless design
- Wall mounting flange
- Housing color RAL9005, others on request
- Dimensions: H = 135 | B = 190 | T = 192 (mm)

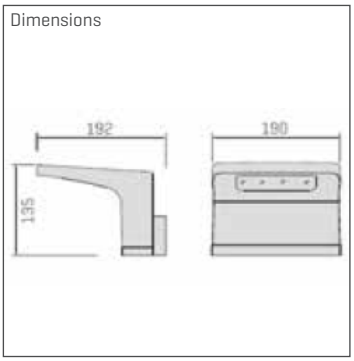

Product number	Lense (●)	Light Color (♦♦)	System performance (W)	System performance typ. (■■W)	LED assembly	System luminous flux (lm)
69070900♦♦BA-SY	ohne	30/40	9	09	SMD-LED	1200

axior 6907B

- Compact LED wall light
- Multifunctional use
- with motion detector
- Use at low to medium mounting heights
- timeless design
- Wall mounting flange
- Housing color RAL9005, others on request
- Dimensions: H = 135 | B = 190 | T = 192 (mm)

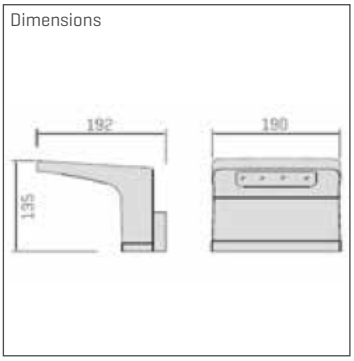

Product number	Lense (●)	Light Color (♦♦)	System performance (W)	System performance typ. (■■W)	LED assembly	System luminous flux (lm)
69070900♦♦BA-SY	ohne	30/40	9	09	SMD-LED	1200

axior | Wall and Ceiling Outdoor Lights

axior 6403

- Wall-mounted luminaire
- compact LED wall light
- Multifunctional use
- Use in low to medium Mounting heights
- timeless rounded design
- Wall mounting flange
- Housing color RAL9005, others on request
- Dimensions: H = 220 | B = 222 | T = 222 (mm)

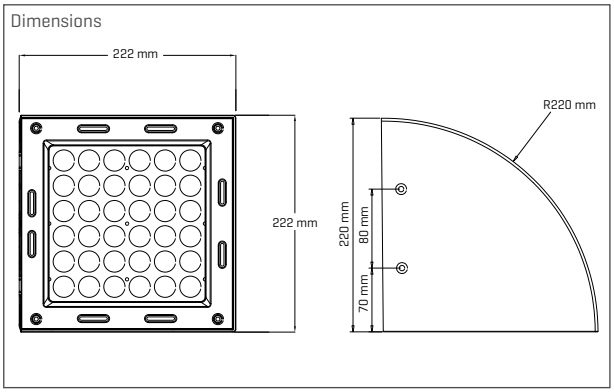

Product number	Lense (●)	Light Color (♦♦)	System performance (W)	System performance typ. (■■W)	LED assembly	System-lichtstrom (lm)
64031000♦♦BA-●AY	S/X/C/B/M/E/T/I/F/P/SY10/SY20	27/30/40	10	10	1 x 2x4	1159
64031900♦♦BA-●AY	S/X/C/B/M/E/T/I/F/P/SY10/SY20	27/30/40	19	19	1 x 2x4	2362
64031000♦♦BA-●AY	Y/V/M/S/B	AM/27/30/40	10	10	1 x 4x8	1598
64031900♦♦BA-●AY	Y/V/M/S/B	AM/27/30/40	19	19	1 x 2x4	3017

axior | Recessed floor lights

axior 6999 S

- In-ground spotlights
- Housing made of powder-coated die-cast aluminum with stainless steel frame
- Installation housing made of PVC plastic
- Temperature-resistant safety glass
- High-power LED with symmetrical distribution
- Protection class IP 67
- Supplied with a 0.5 m connection cable
- Dimensions lamp H = 102 ø = 116 (mm)
- Dimensions mounting frame H = 150 ø = 102 (mm)

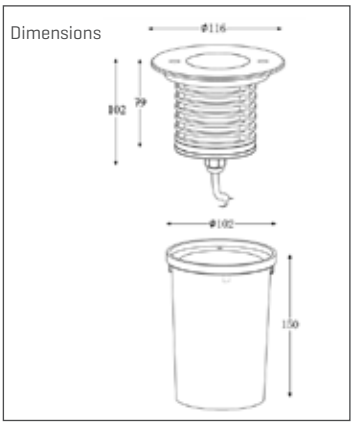

Product number	Lense (●)	Light Color (♦♦)	System performance (W)	System performance typ. (■■W)	LED assembly	System luminous flux (lm)
69990300♦♦BA-●	SY10/SY20	30	3,1	03,01	3 HP LED	280

axior | Recessed floor lights

axior 6999 L

- In-ground spotlights
- Housing made of powder-coated die-cast aluminum with stainless steel frame
- Installation housing made of PVC plastic
- Temperature-resistant safety glass
- High-power LED with symmetrical distribution
- Delivery with 0.5m connection cable
- Degree of protection IP67
- Dimensions lamp H = 111 ø = 173 [mm]
- Dimensions of mounting frame H = 150 ø = 157 [mm]

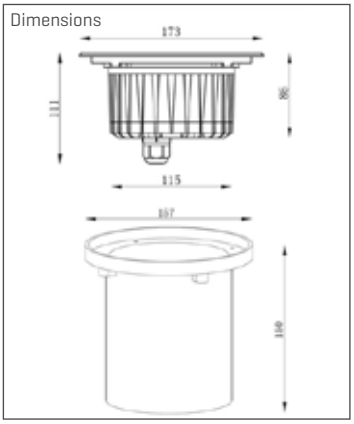

Product number	Lense [●]	Light Color [♦♦]	System performance [W]	System performance typ. [■■W]	LED assembly	System luminous flux [lm]
69990700♦♦BA-●	SY10/SY20	30	7,6	07,06	6 HP LED	540
69991200♦♦BA-●	SY10/SY20	30	12,2	12,02	6 HP LED	920

axior 6999 RGB

- In-ground spotlights
- Beam direction adjustable
- Housing + installation housing made of powder-coated die-cast aluminum
- with stainless steel frame
- Temperature-resistant safety glass
- High-Power RGB LED with symmetrical distribution
- Delivery with 0.5m connection cable
- Degree of protection IP67
- Dimensions lamp H = 330 ø = 245 [mm]

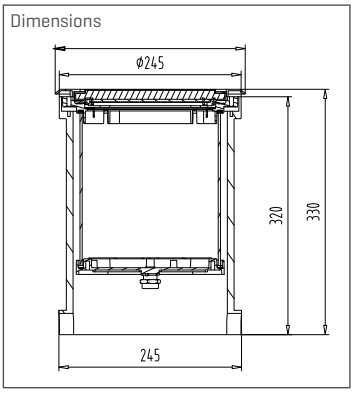

Product number	Lense [●]	Light Color [♦♦]	System performance [W]	System performance typ. [■■W]	LED assembly	System luminous flux [lm]
69992800RGBBA-I	SY10/SY30/SY45	RGB	28	28	HP LED	–

axior 6998 RGBW DMX512

- Floor spotlights
- Housing and installation housing made of powder-coated die-cast aluminum
- Temperature-resistant safety glass
- High-power LED with symmetrical distribution
- Degree of protection IP67
- Dimensions lamp H = 331 ø = 370 [mm]

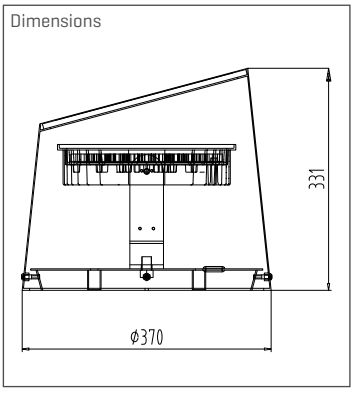

Product number	Lense [●]	Light Color [♦♦]	System performance [W]	System performance typ. [■■W]	LED assembly	System luminous flux [lm]
69983600RGBWDMX-I	SY30/SY60	RGBW	36	36	HP LED	–

axthuros | Planar Radiator

axthuros 9160

- Functional technical design
- Housing made of powder-coated aluminum
- ESG luminaire glass
- Optics PMMA lenses in multilayer technology
- stable mounting bracket continuously adjustable
- Power reduction switching phase ChronoStep, Dali
- Total weight 4 kg
- Degree of protection IP66, IK09, protection class I
- Dimensions: H = 73 | B = 283 | T = 390 [mm]
- Housing color RAL9022, others on request
- Dielectric strength 10kV

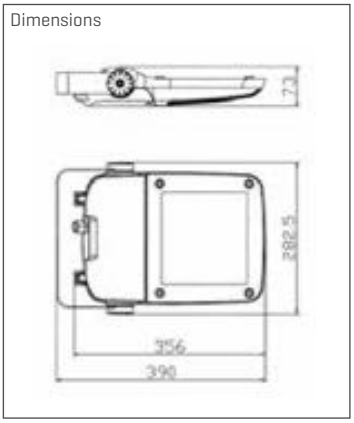

Product number	Lense [●]	Light Color [♦♦]	System performance [W]	System performance typ. [■■W]	LED assembly	System luminous flux [lm]
9160■■00♦♦ME-●AY	Y/S/X/C/B/M/E/T/I/F/P/SY10/SY20	27/30/40	7 - 19	07/13/19	1 x 2x4	846 - 2362
9160■■00♦♦ME-●AY	Y/S/X/C/B/M/E/T/I/F/P/SY10/SY20	27/30/40	18 - 32	18/22/32	2 x 2x4	2208 - 4175

axthuros 9161

- Functional technical design
- Housing made of powder-coated aluminum
- ESG luminaire glass
- Optics PMMA lenses in multilayer technology
- stable mounting bracket continuously adjustable
- Power reduction switching phase ChronoStep, Dali
- Total weight 8.9 kg
- Degree of protection IP66, IK09, protection class I
- Dimensions: H = 81 | B = 386 | T = 416 [mm]
- Housing color RAL9022, others on request
- Dielectric strength 10kV

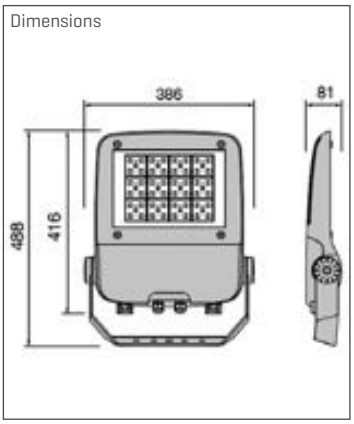

Product number	Lense [●]	Light Color [♦♦]	System performance [W]	System performance typ. [■■W]	LED assembly	System luminous flux [lm]
Basic						
916115000♦♦BA-●AY	Y/S/X/C/B/M/E/T/I/F/P/SY10/SY20	30/40/50	62- 150	62- 150	1x 48	6729 - 16280
Medium						
9161■■00♦♦ME-●AY	S/X/C/B/M/E/T/I/F/P/SY10/SY20	27/30/40/50	22 - 42	22/32/42	1 x 2x8	3080-6777
9161■■00♦♦ME-●AY	S/X/C/B/M/E/T/I/F/P/SY10/SY20	27/30/40/50	52 - 100	52/62/72/82/100	2 x 2x8	8447-14941

axthuros | Planar Radiator

axthuros 9161 RGB

- Housing made of powder-coated aluminum
- ESG luminaire glass
- Optics PMMA lenses in multilayer technology
- stable mounting bracket continuously adjustable
- RGB
- Total weight 8.9 kg
- Degree of protection IP66, IK09, protection class I
- Dimensions: H = 81 | B = 386 | T = 416 (mm)
- Housing color RAL9022, others on request
- Dielectric strength 10kV

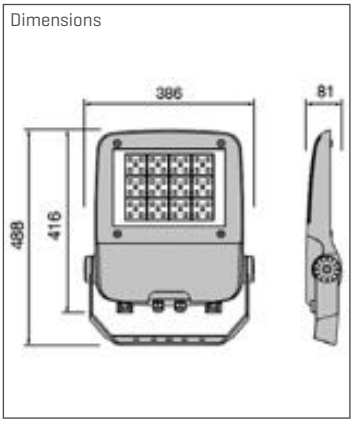

Product number	Lense (●)	Light Color (♦♦)	System performance (W)	System performance typ. (■■W)	LED assembly	System luminous flux (lm)
91618000RGBDMX-SY20	20°	RGB	80	80	RGB HP	-

axthuros 9162

- Functional technical design
- Housing made of powder-coated aluminum
- ESG luminaire glass
- Optics PMMA lenses in multilayer technology
- stable mounting bracket continuously adjustable
- without Power reduction
- Total weight 12.9 kg
- Degree of protection IP66, IK09, protection class I
- Dimensions: H = 94 | B = 461 | T = 508 (mm)
- Housing color RAL9022, others on request
- Dielectric strength 10kV

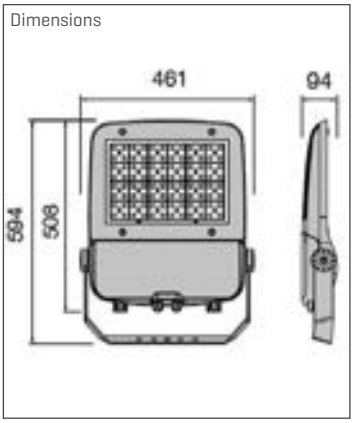

Product number	Lense (●)	Light Color (♦♦)	System performance (W)	System performance typ. (■■W)	LED assembly	System luminous flux (lm)
Basic						
9162■■00♦♦BA-●AY	Y/S/X/C/B/M/E/T/I/F/P/SY10/SY20	30/40/50	150 - 240	150 - 240	1x 96	16335 - 23760
Medium						
9162■■00♦♦ME-●AY	S/X/C/B/M/E/T/I/F/P/SY10/SY20	27/30/40/50	100 - 150	100/120/150	3 x 2x8	14142-20641
9162■■00♦♦ME-●AY	S/X/C/B/M/E/T/I/F/P/SY10/SY20	27/30/40/50	160 - 208	160/180/208	4 x 2x8	21682-27855

axthuros | Planar Radiator

axthuros 9163

- Functional technical design
- Housing made of powder-coated aluminum
- ESG luminaire glass
- Optics PMMA lenses in multilayer technology
- stable mounting bracket continuously adjustable
- Without Power reduction
- Total weight 21 kg
- Degree of protection IP66, IK09, protection class I
- Dimensions: H = 107 | B = 558 | T = 727 [mm]
- Housing color RAL9022, others on request
- Dielectric strength 10kV

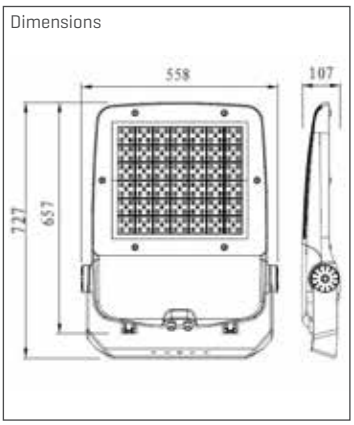

Product number	Lense [●]	Light Color [♦♦]	System performance [W]	System performance typ. [■■W]	LED assembly	System luminous flux [lm]
916338000♦♦BA-IAY	Y/S/X/C/B/M/E/T/I/F/P/SY10/SY20	40/50	380	380		43825lm
916345000♦♦BA-IAY	Y/S/X/C/B/M/E/T/I/F/P/SY10/SY20	40/50	480	480		48280lm

axthuros 9200

- Hall downlights
- Functional round design
- Housing made of powder-coated aluminum
- ESG luminaire glass
- Optics PMMA lenses in multilayer technology
- Stable mounting bracket continuously adjustable
- Without Power reduction
- Total weight 6 kg
- Degree of protection IP65, IK10, protection class I
- Dimensions: H = 160 | ø = 350 [mm]
- Housing color RAL9022, others on request
- Dielectric strength 10kV

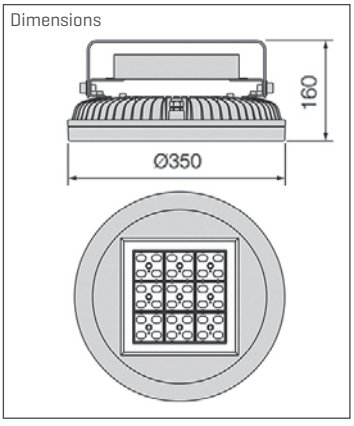

Product number	Lense [●]	Light Color [♦♦]	System performance [W]	System performance typ. [■■W]	LED assembly	System luminous flux [lm]
9200■■00♦♦BA-●AY	120°	4000	60 - 80W		36	6100 - 8500

axthuros | Planar Radiator

axthuros 9201

- Hall downlights
- Functional round design
- Housing made of powder-coated aluminum
- ESG luminaire glass
- Optics PMMA lenses in multilayer technology
- stable mounting bracket continuously adjustable
- Without Power reduction
- Total weight 9.3 kg
- Degree of protection IP65, IK10, protection class I
- Dimensions: H = 175 | ø = 450 [mm]
- Housing color RAL9022, others on request
- Dielectric strength 10kV

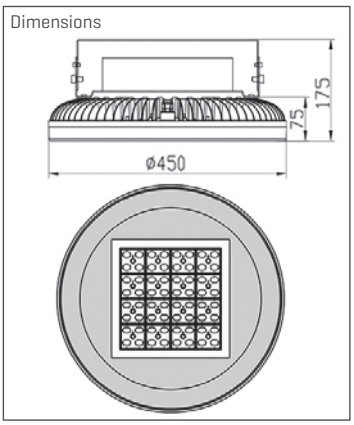

Product number	Lense [●]	Light Color [♦♦]	System performance [W]	System performance typ. [■■W]	LED assembly	System luminous flux [lm]
9201■■00♦♦BA-●AY	120°	4000	120 - 180W		64	11038 - 18800

Accessories

Product number	Product
700640	Mast arch standard, R 260, spigot 76 mm, cone fastening, hot-dip galvanized steel
700641	Standard mast arch, R 260, 76 mm spigot, cone fastening, powder-coated DB or RAL
700642	Mast arch standard, R 260, spigot 76 mm, cone fastening hot-dip galvanized steel + 80cm
700643	Mast arch standard, R 260, spigot 76 mm, cone mounting, powder-coated DB or RAL + 80cm
700739	Standard wall bend, R 260, 76 mm spigot, cone fastening, hot-dip galvanized steel
700740	Wall arch standard, R 260, spigot 76 mm, cone attachment powder-coated DB or RAL + 80cm
700741	Mast double arch standard, R 260, spigot 76 mm, cone fastening hot-dip galvanized steel
700742	Mast double arch standard, R 260, spigot 76 mm, cone fastening, powder-coated DB or RAL
700743	Pole arch, So, 1250mm, spigot 76 mm, cone fastening, hot-dip galvanized steel
700744	Mast arch, So, 1250mm, spigot 76 mm, cone fastening powder-coated DB or RAL
700745	Wall bend, So, 540mm, wall flange, cone fastening, hot-dip galvanized steel
700746	Wall bend, So, 540mm, wall flange, cone fastening powder-coated DB or RAL + 80cm
700747	Corner wall bracket, So, 540mm, wall flange, cone fastening, hot-dip galvanized steel
700748	Corner wall bracket, So, 540mm, wall flange, cone fastening powder-coated DB or RAL + 80cm
750057	Light adapter for 1/2 "thread
701011	Mast bracket 1-way 76mm, 076.060.250 display 250 mm post-top mounting, hot-dip galvanized steel
700749	2-way mast bracket 90 ° / 15 ° 76mm, 076.060.300 display 300 mm post-top mounting, hot-dip galvanized steel
700749	2-way mast bracket 180 ° / 15 ° 76mm, 076.060.180 display 1500 mm post-top mounting, hot-dip galvanized steel
700722	2-way mast bracket 180 ° / 15 ° 76mm, 076.060.180 display 250mm post-top mounting, hot-dip galvanized steel
700930	3-way mast bracket 120 ° / 15 ° 76mm, 3.0500.076.060.120 display 500 mm - post-top mounting, hot-dip galvanized steel
700939	4-way mast bracket 120 ° / 15 ° 76mm, 4.0500.076.060.090 display 500 mm - post-top mounting, hot-dip galvanized steel
701023	Pole boom spotlight 76mm, 1.0300.076-300 width 300 mm - post-top mounting, hot-dip galvanized steel
700726	Universal bracket, wall mounting 10 ° 60mm, hot-dip galvanized steel
700725	Mast extension 76/60/1000, hot-dip galvanized steel

Product number	Product
700731	Extension mast 3.0 / 60mm conical round, galvanized with door
700777	Extension mast 3.5 / 60mm conical round, galvanized with door
700778	Extension mast 4.0 / 60mm conical round, galvanized with door
700779	Extension mast 4.5 / 60mm conical round, galvanized with door
700780	Extension mast 5.0 / 60mm conical round, galvanized with door
700781	Extension mast 6.0 / 60mm conical round, galvanized with door
700782	Extension mast 3.0m / 76mm conical round, galvanized with door
700783	Extension mast 3.5m / 76mm conical round, galvanized with door
700784	Extension mast 4.0m / 76mm conical round, galvanized with door
700759	Extension mast 4.5m / 76mm conical round, galvanized with door
700719	Extension mast 5.0m / 76mm conical round, galvanized with door
700785	Extension mast 5.5m / 76mm conical round, galvanized with door
700664	Extension mast 6.0m / 76mm conical round, galvanized with door
700786	Extension mast 6.5m / 76mm conical round, galvanized with door
700787	Extension mast 7,0m / 76mm conical round, galvanized with door
700720	Extension mast 7.5m / 76mm conical round, galvanized with door
700788	Extension mast 8.0m / 76mm conical round, galvanized with door
700789	Extension mast 8.5m / 76mm conical round, galvanized with door
700790	Extension mast 9.0m / 76mm conical round, galvanized with door
700791	Extension mast 10.0m / 76mm conical round, galvanized with door
700792	Extension mast 12.0m / 76mm conical round, galvanized with door
700835	Extension mast 3.25m / 76mm conical (F standard), galvanized with door
700793	Collar for extension pole 3.0-5.0m 115
700794	Cuff for extension mast 6.0-7.0m 125
700795	Cuff for top mast 7.5-8.0m 160
700796	Cuff for extension mast 8.5-9.0m 170
700797	Collar top mast 10m 180
700798	Collar top mast 12m 200
700770	Solid galvanized base for bollards

Accessories

Masts for Historical Lights

Model number: 701056

Historic masts
- Height 3.2 m - adjustable to 3.5 m
- 4-part, welded together
- Lower part, decorative element, decorative rose above, round aluminum tube or with grooves
- Attachment of the mast to the concrete foundation or steel root
- Powder coating of the mast according to RAL 9005 (black)
- Spigot size 60 mm for attaching the nostalgic lamp

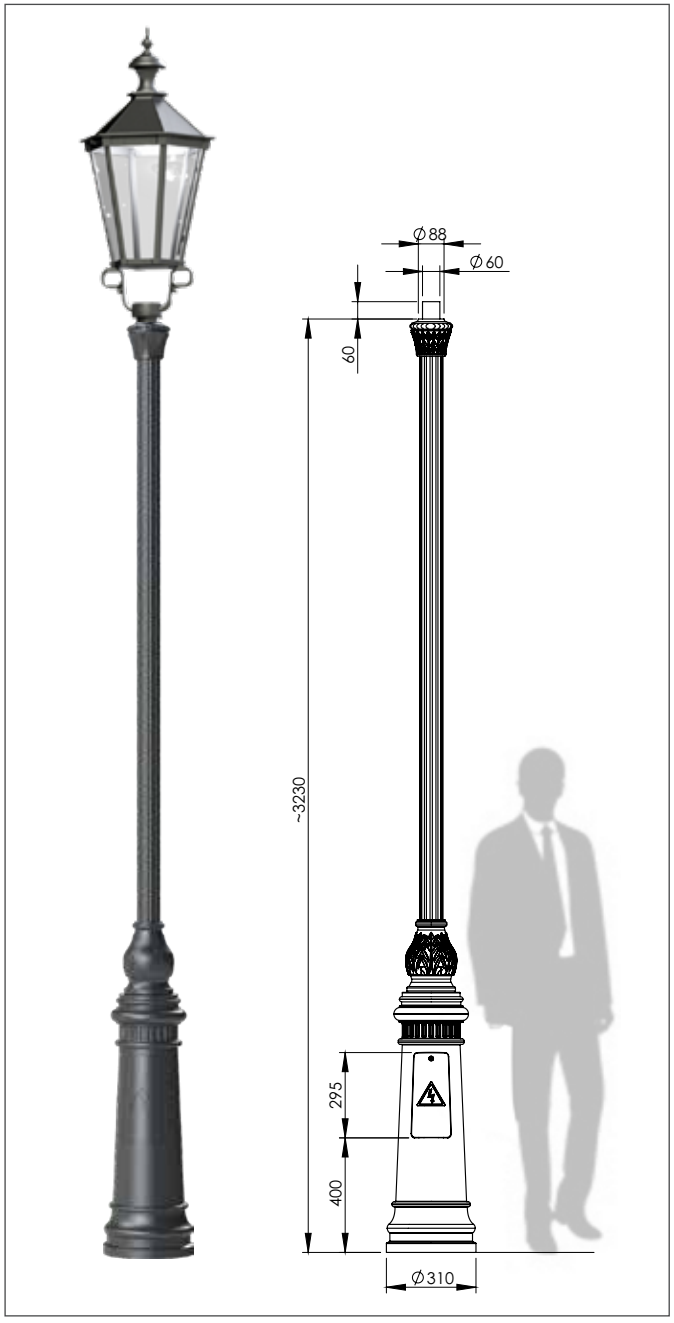

Model number: 702306

Historical wall bracket for surface mounting
- Height 400mm - boom length 680mm
- Stable wall flange
- Decorative elements
- Powder coating RAL 9005 (black)
- 60 mm spigot for attaching historical lights

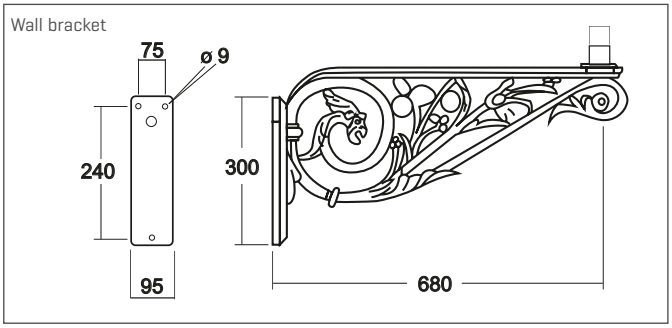

TRS-STAR

electronics4U

www.trs-star.com

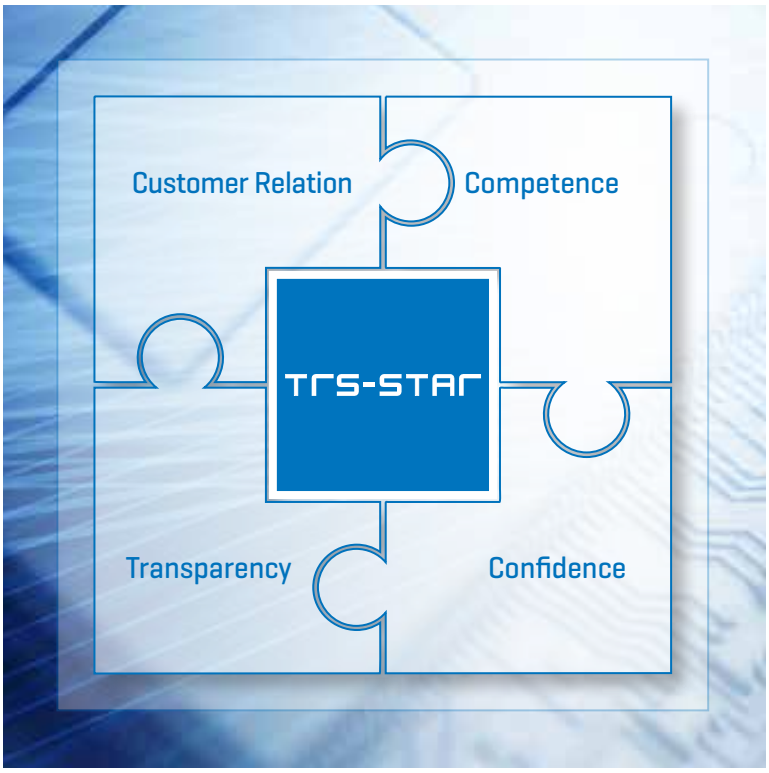

TRS-STAR GmbH

Headquarters | Sales · Marketing

Werner-von-Siemens-Str. 1
76297 Stutensee
T +49 7249 95222-115
licht@trs-star.com

Sales · Project Engineering

Schraderstraße 44
67227 Frankenthal
T +49 6233 347-125
licht@trs-star.com

Lighting · Sales Europe

Germany
Frank Werz
Development, Planning
and Technical Sales
T +49 6233 347-125
werz@trs-star.com

France
Christine Commelin
14 allée de la Vaudonnière
91370 Verrières le Buisson
T +33 614 932518
commelin@trs-star.com

Romania
Alexandru Balanescu
bd Ion Mihalache 319, bl 21, ap
15 011184 Bucharest 1
T +40 72 3569406
balanescu@trs-star.com

© TRS-STAR. All rights reserved. Although great care has been taken in preparing this printed matter, TRS-STAR can not be held responsible for any errors or omissions.
All information in here is subject to change without notice. All hardware and software names used are trade names and/or trademarks of the respective manufacturer.

21_11640_TRS